Foxboro™ DCS

System Advisor - Process Control

PSS 41S-4SysAud

Product Specification

September 2026

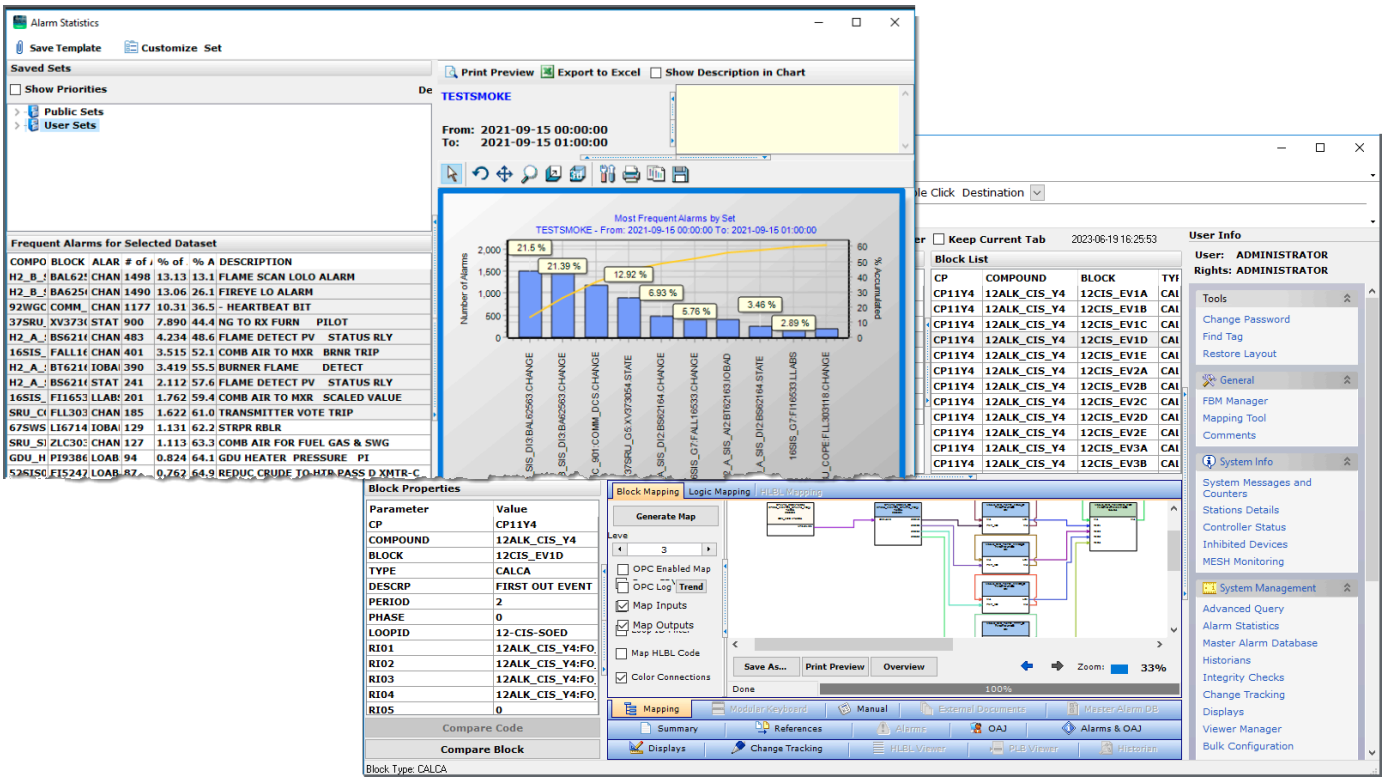

https://www.se.com

Legal Information

The information provided in this document contains general descriptions, technical characteristics and/or recommendations related to products/solutions.

This document is not intended as a substitute for a detailed study or operational and site-specific development or schematic plan. It is not to be used for determining suitability or reliability of the products/solutions for specific user applications. It is the duty of any such user to perform or have any professional expert of its choice (integrator, specifier or the like) perform the appropriate and comprehensive risk analysis, evaluation and testing of the products/solutions with respect to the relevant specific application or use thereof.

The Schneider Electric brand and any trademarks of Schneider Electric and its subsidiaries referred to in this document are the property of Schneider Electric or its subsidiaries. All other brands may be trademarks of their respective owner.

This document and its content are protected under applicable copyright laws and provided for informative use only. No part of this document may be reproduced or transmitted in any form or by any means (electronic, mechanical, photocopying, recording, or otherwise), for any purpose, without the prior written permission of Schneider Electric.

Schneider Electric does not grant any right or license for commercial use of the document or its content, except for a non-exclusive and personal license to consult it on an "as is" basis.

Electrical equipment should be installed, operated, serviced, and maintained only by qualified personnel. No responsibility is assumed by Schneider Electric for any consequences arising out of the use of this material.

Schneider Electric reserves the right to make changes or updates with respect to or in the content of this document or the format thereof, at any time without notice.

To the extent permitted by applicable law, no responsibility or liability is assumed by Schneider Electric and its subsidiaries for any errors or omissions in the informational content of this document, as well as any non-intended use or misuse of the content thereof.

Overview

In many industries, plant operations require staff to have positive knowledge of the control system's configuration and to be able to access important information such as alarms, operator actions, and system health. EcoStruxure™ System Advisor - Process Control, formerly System Auditor for Foxboro, helps improve operational integrity and insight by adding enhanced configuration documentation, change tracking, alarm management, system health monitoring, and access to operator functions in the EcoStruxure Foxboro™ Distributed Control System (DCS).

Regulatory Position

System Advisor - Process Control is a response to practices required by FDA Regulation 21 CFR Part 11, OSHA 1910, and other regulations. These regulations require that changes made to the control system be documented and distributed to affected parties, especially to the process operators and their supervisors, and that access to the system be controlled and monitored.

Though System Advisor - Process Control provides support for these regulations, it is not sufficient by itself to help verify that any given installation is compliant.

Certification of any given installation as compliant is achieved not only through the application of hardware and software products, like System Advisor, but also through external review, internal procedures, and a variety of other mechanisms.

System Advisor - Process Control is also a response to the Alarm Management recommendation, such as EMMUA, EEMUA 191, and ISA 18.2.

Features

- **System Documentation**
  - Provides extensive I/O documentation.
  - Documents mismatched configurations.
  - Documents block-to-block references, block-to-display references, and block-to-Historian references.
  - Documents High Level Batch language (HLBL)/Programmable Logic Block (PLB) logic, including indirect block references in HLBL code.
  - Provides graphical maps of block connections and flowcharts of HLBL code.
- **Change Tracking**
  - Associates the current user with control station changes.
  - Tracks control configuration changes.
  - Tracks ladder logic and sequence logic changes made to primary and included files.
  - Tracks Operator Action Journal (OAJ) information.
  - Tracks sequence of events (SOEs) data.

- **Reporting**
  - Stores historical information in the server database.
  - Allows viewing of historical data by object type: activities, blocks, users, historians, displays, alarms, OAJs, and SOEs.
  - Provides historical view by date and change.
  - Allows customized views by filtering and sorting.
  - Allows creation of custom reports that include multiple object types and filters.
- **Alarm Management**
  - Allows analysis of both alarm dynamics and alarm configuration.
  - Provides documentation and rationalization features.
  - Provides Key Performance Indicators (KPIs).
- **I/O Management**
  - Documents I/O.
  - Finds spare I/O.
  - Reserves I/O.
- **System Health Monitoring**
  - Monitors control network traffic.
  - Monitors system monitor messages.
  - Monitors stations.
- **Integrity Checking**
  - Checks for multiple types of mismatched configurations.
- **Advanced Queries**
  - Provides standard queries.
  - Allows for customized queries.

Benefits

- Verify correct database configuration and optimize resource utilization and system performance.
- Reduce costs associated with managing documentation updates.
- Map Foxboro DCS blocks.
- Improve process performance.
- Improve reliability.
- Reduce audit costs for regulatory compliance.

Shelving Alarms

The Alarm Shelving Utility (ASU) provides comprehensive alarm shelving capabilities for the Foxboro DCS. It is a supplemental utility for System Advisor - Process Control. See *EcoStruxure™ Alarm Shelving Utility Product Specification* (PSS 41S-4SALMSHL).

Connecting System Advisors

If you have a Triconex safety system and use System Advisor - Process Safety, you can connect it with System Advisor - Process Control. Connecting System Advisors for safety and control offers these benefits:

- Seamless communication and data sharing.
- Streamlined maintenance and troubleshooting.
- Increased operational efficiency.
- Enhanced safety and risk mitigation.
- Enhanced process monitoring and control.

• When System Advisor - Process Safety and System Advisor - Process Control are connected, you can open each application from within the other.

Additionally, tagnames that communicate with both Triconex and Foxboro DCS are indicated with blue icons.

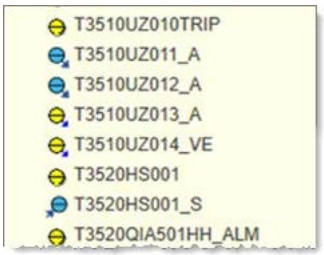

Architecture

System Advisor - Process Control is based on a client server architecture. Information flows from the Foxboro DCS Control Network stations to System Advisor - Process Control.

Figure 1 - System Advisor - Process Control Client Server Architecture

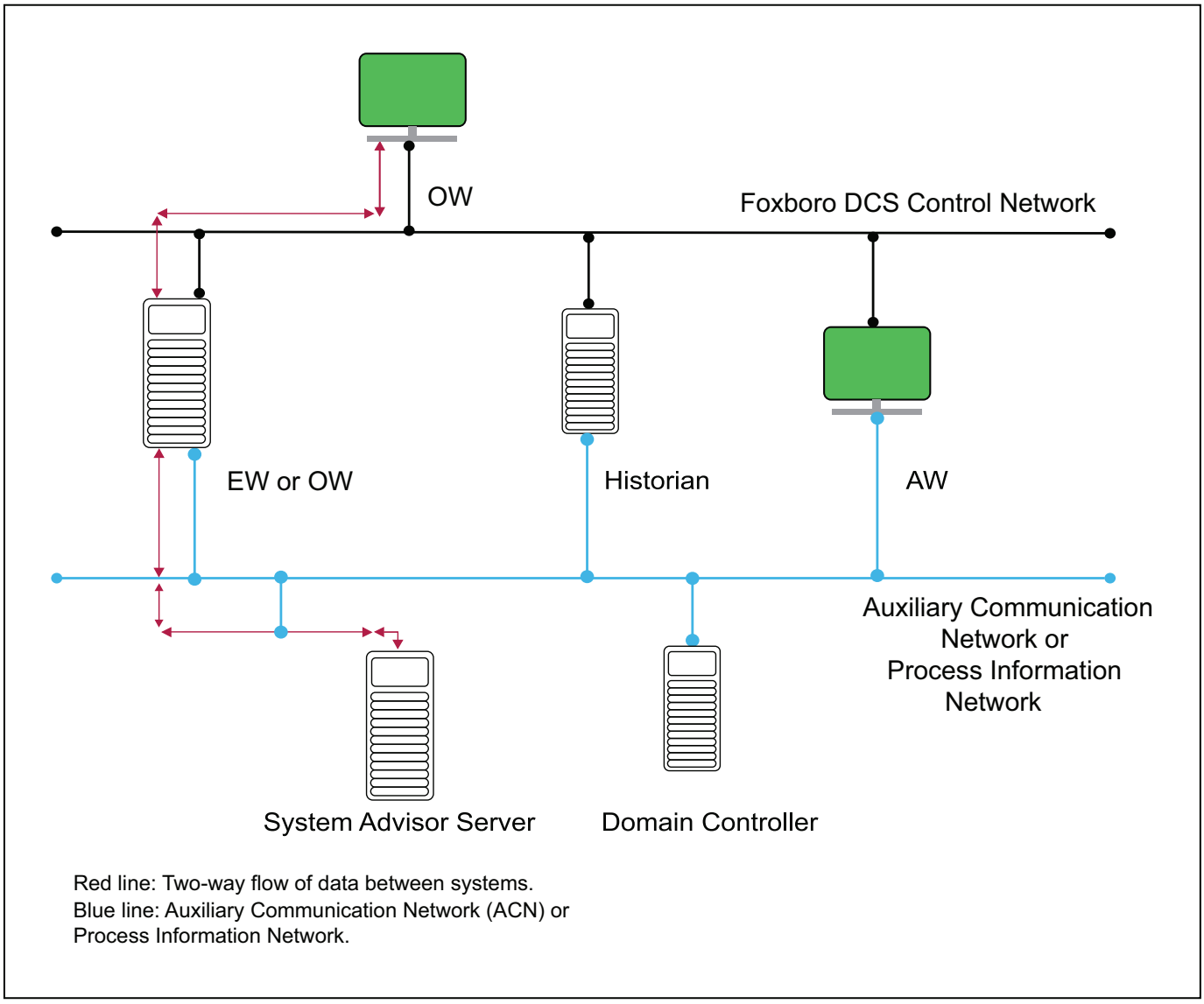

System Requirements

The minimum system requirements for the System Advisor server and ASU are listed below.

Table 1 - System Advisor - Process Control Desktop and Servers with up to 35 Control Processors

Computer	HP Z4 Workstation
Operating System	• Windows 10 (64 bit) • Windows Server 2016 (64 bit) • Windows Server 2022 (64 bit)
CPU	Intel or equivalent 3.6 GHz, with multi-core enabled
Memory	MySQL 5.7.44 – 16 GB RAM or higher
Hard Drive	442 GB available minimum in C drive
Ethernet Port	1 100 Mbps minimum to connect to the auxiliary communication network
RAID	0, 5, or 10 recommended
Unlimited clients if using Windows Server; up to 10 clients if using Windows Desktop	

Table 2 - System Advisor - Process Control Servers with 36 to 200 Control Processors

Computer	Server-grade
Operating System	• Windows Server 2016 (64 bit) • Windows Server 2022 (64 bit)
CPU	Intel or equivalent 2.8 GHz or higher, with multi-core enabled having a minimum of 8 cores
Memory	MySQL 5.7.44 – 16GB RAM or higher
Hard Drive	480 GB available minimum
Ethernet Port	1 100 Mbps minimum to connect to the auxiliary communication network
RAID	0, 5, or 10 recommended
Unlimited clients	

Table 3 - System Advisor - Process Control Servers with 35 to 200 Control Processors - Virtual Machine

Computer	V91 DL380 Gen 9 Server
Operating System	Windows Server 2016
CPU	Intel Xeon CPU, E5-2620 v3, 1.9 GHz, VCPUs-8
Memory	32 GB RAM

Table 3 - System Advisor - Process Control Servers with 35 to 200 Control Processors - Virtual Machine (Continued)

Hard Drive	100 GB available minimum
Ethernet Port	1 100 Mbps minimum to connect to the auxiliary communication network
RAID	0, 5, or 10 recommended

Table 4 - System Advisor - Process Control Clients

Computer	Desktop or Server
Operating System	Windows 10 (64 bit)
CPU	Intel 1.5 GHz or faster
Memory	8 GB RAM minimum
Hard Drive	100 GB available minimum
Ethernet Port	1 100 Mbps minimum to connect to the auxiliary communication network
Monitor Resolution	1280 x 1024

Configuration and Performance Guidelines

- To configure System Advisor - Process Control with more than 200 CPs (control processors), contact Global Customer Support (GCS) for guidance.
- To use systems with other hardware and software operating system configurations, contact Global Customer Support (GCS) for validation of the server.
- If using a Foxboro DCS spare machine as a System Advisor server, you might need to enable the multi-core capabilities in the BIOS or in the boot.ini on Windows to allow the multi core.
- You can share System Advisor with other applications that do not interact with MySQL. However, to maintain performance, other applications cannot use the system resources required for System Advisor. For example, if an application requires 2 CPUs and 8 GB of RAM, you'll need to plan for those in addition to the resources required for System Advisor.
- System Advisor does not require excessive maintenance, but if it is shared with another application that requires regular maintenance, then System Advisor's cost and availability is affected. Therefore, we recommend you use a dedicated server for System Advisor.

Related Documents

Document Number	Description
B0750HA	*EcoStruxure™ System Advisor - Process Control User's Guide*
B0750HC	*EcoStruxure™ Alarm Shelving Utility User's Guide*
B0750HG	*EcoStruxure™ System Advisor - Process Safety User's Guide*
B0750SK	EcoStruxure™ *System Advisor - Process Control and Alarm Shelving Utility Release Notes*
PSS 41S-4TRIAUD	*EcoStruxure™ System Advisor - Process Safety Product Specification*
PSS 41S-4SALMSHL	*EcoStruxure™ Alarm Shelving Utility Product Specification*

Schneider Electric Systems USA, Inc.
70 Mechanic Street
Foxboro, Massachusetts 02035–2040
United States of America

Global Customer Support: https://pasupport.se.com

© 2015–2026 Schneider Electric. All rights reserved.

PSS 41S-4SysAud, Rev F