Foxboro™ DCS

OPC UA Client Driver for Field Device Controller 280

PSS 41S-3FDCOPC

Product Specification

January 2026

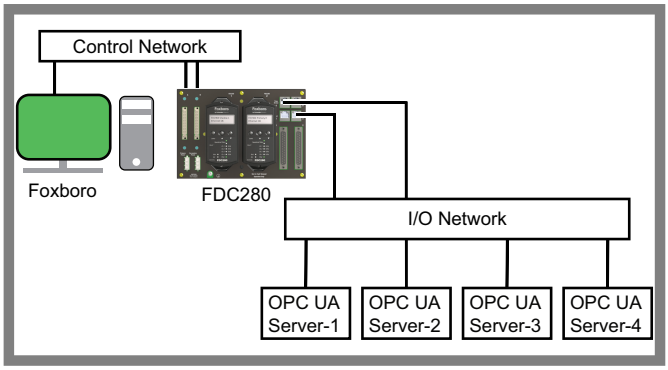

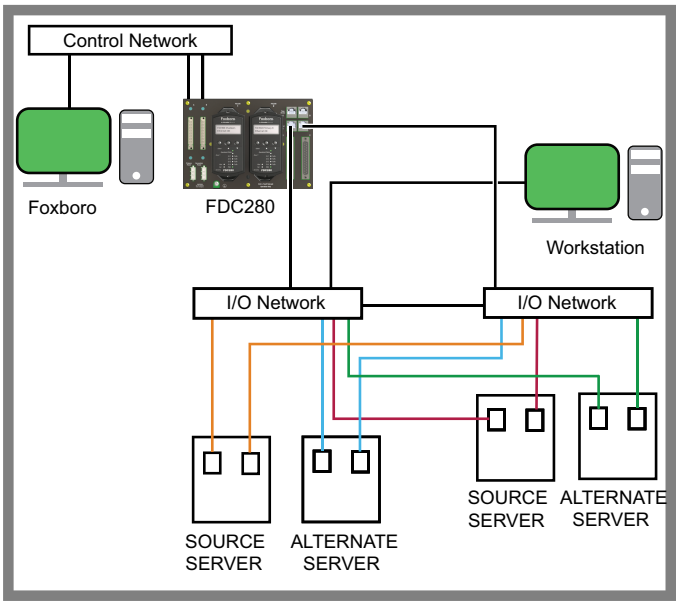

https://www.se.com

Legal Information

The information provided in this document contains general descriptions, technical characteristics and/or recommendations related to products/solutions.

This document is not intended as a substitute for a detailed study or operational and site-specific development or schematic plan. It is not to be used for determining suitability or reliability of the products/solutions for specific user applications. It is the duty of any such user to perform or have any professional expert of its choice (integrator, specifier or the like) perform the appropriate and comprehensive risk analysis, evaluation and testing of the products/solutions with respect to the relevant specific application or use thereof.

The Schneider Electric brand and any trademarks of Schneider Electric SE and its subsidiaries referred to in this document are the property of Schneider Electric SE or its subsidiaries. All other brands may be trademarks of their respective owner.

This document and its content are protected under applicable copyright laws and provided for informative use only. No part of this document may be reproduced or transmitted in any form or by any means (electronic, mechanical, photocopying, recording, or otherwise), for any purpose, without the prior written permission of Schneider Electric.

Schneider Electric does not grant any right or license for commercial use of the document or its content, except for a non-exclusive and personal license to consult it on an "as is" basis.

Schneider Electric reserves the right to make changes or updates with respect to or in the content of this document or the format thereof, at any time without notice.

To the extent permitted by applicable law, no responsibility or liability is assumed by Schneider Electric and its subsidiaries for any errors or omissions in the informational content of this document, as well as any non-intended use or misuse of the content thereof.

Overview

The OPC UA Client Driver integrates plant-floor third-party devices via the OPC UA Server with Foxboro DCS for real-time data access. It can also directly integrate a plant floor device if the device has a built-in embedded OPC UA server.

Analog and digital values can be read from or written to an OPC UA Server that supports these data types. Communication is performed via an Ethernet connection between the FDC280 and an OPC UA Server.

The FDC280:

- Supports interfacing one to four simplex OPC UA Servers
- Supports interfacing two Non-Transparent HOT(a) Redundant OPC UA Servers.
- Supports interfacing to a combination of simplex and Non-Transparent HOT(a) Redundant Servers.

Features

- Real time data Integration of OPC UA Servers into a Foxboro DCS using Ethernet connectivity
- Support for Soft dPAC High Availability controller for EcoStruxure Automation Expert. For High Availability support, SE EAE AsRock IPC iEP5000G is used as a host platform.
- Support for Modicon M580 dPAC controller for EcoStruxure Automation Expert
- Supports workstation-based or embedded OPC UA Servers with FDC280 Controllers. OPC UA Servers can be Simplex and/or Non-Transparent HOT(a) Redundant. Details about capacity and performance are provided in Specifications, page 7.
- Supports application authentication using self-signed certificates.
- Supports Foxboro DCS OPC UA Server
- Supports interfacing to Simplex OPC UA Servers conforming to the Standard OPC UA Server Profile, Embedded UA Server Profile, or Micro-embedded device Server Profile
- Supports the following modes of user authentication:
  - Anonymous user
  - Username and password
- Supports Security mode as **None**, **Sign**, and **Sign & Encrypt**.
- Availability of standard Foxboro DCS plant management functions and operator displays.
- System Manager detection, reporting and management of device connectivity.
- Enhanced diagnostics using disruption-less diagnostics tool.
- Supports bulk configuration of tags using Control Software Bulk Data Object.
- Supports configuration using Control Software only.

Ease of Integration

FDC280 with OPC UA Client driver enables you to exchange data between OPC UA Servers and Foxboro DCS, thus taking advantage of both the power of the Foxboro DCS and enhanced security and interoperability features of OPC UA communication.

Foxboro DCS software also provides standard plant management functions and operator displays for these devices, including startup, and communication fault detection and display using System Manager.

The FDC280 with OPC UA Client driver can be configured as either simplex or fault-tolerant, as shown in *EcoStruxure™ Foxboro™ DCS Field Device Controller 280 (FDC280)* (PSS 41H-2FDC280)

To maintain separation between the control processes and the external device communication processes, the OPC UA Client driver is run on Core 2 of the FDC280's CPU and communicates to the control process running on Core 1 via an internal bus.

Hardware

To add OPC UA Client driver support to earlier releases of FDC280, a major image update is required. See *EcoStruxure™ Foxboro™ DCS Field Device Controller 280 (FDC280)* (PSS 41H-2FDC280).

Software

The FDC280 OPC UA Client Driver is compatible with all releases of:

- Foxboro DCS Control Core Services v9.7 and later
- Control Software v7.5 and later

Communications

The FDC280 connects to a third-party OPC UA Server over a user-supplied network connection.

Configuration

Control Software IDE

Control Core Services (CCS) v9.7 or later and Control Software (CS) v7.5 or later are required to support the FDC280 image that introduces OPC UA Client Driver with multi-server support. To configure the FDC280 OPC UA Client Driver, use the Control Software Integrated Development Environment (IDE), as described in *EcoStruxure™ Foxboro™ DCS FDC280 OPC UA Client Driver User's Guide* (B0700WJ).

FDC280 OPC UA Client Driver cannot be configured using FDC280 CCS Configurator and ICC.

Operation

The FDC280 collects the required data from the OPC UA Server, performs the necessary conversions, and then stores the converted data in its database for incorporation into the Foxboro DCS plant management functions and operator displays. Data can also be written out to the OPC UA Server from Foxboro DCS.

Installation and Download

There are two types of driver installation (Minor and Major Image Update) that are explained in *EcoStruxure™ Foxboro™ DCS Field Device Controller 280 (FDC280)* (PSS 41H-2FDC280).

Depending on the type of installation required, installation of the driver may require either a download operation that does not disrupt the rest of Foxboro DCS (Minor) or an operation that involves full, double-sided reboot of the FDC280 (Major).

Product Support

The FDC280 OPC UA Client Driver can be ordered from BuyAutomation.

Part Number	Description
K0177EC	FDC280 OPC UA Client Driver - Model K

The product includes media and documentation. Engineering assistance can be provided through the normal channels.

Diagnostics

All diagnostic data for the OPC UA Communication is made available through Distributed Control Interface (DCI) input blocks. The FDC280 OPC UA Client Driver also enables the debugging of any device interface issues, by logging all messages exchanged with a device for analysis, in the FDC280 Diagnostic application on a workstation connected to the I/O network.

The FDC280 communication to the I/O device on the network interface is encrypted for all security modes. Therefore, the conventional method of capturing network data to analyze and debug does not work. The FDC280 can log all messages in decrypted form and send them out to the FDC280 Diagnostic application on a workstation connected to the same network as the I/O device.

Specifications

<table>
<tr><td>Capacity and Performance</td><td>FDC280 Controller supports the configurations described in this table:
One to four simplex OPC UA Servers per FDC280 controller
Non-Transparent HOT(a) Redundancy – FDC280 OPC UA Driver Communication with Pair of Redundant OPC UA Servers
<table>
<tr><th>Number of Non-Transparent HOT (a) Redundant OPC UA Servers</th><th>Number of Simplex OPC UA Servers</th><th>Publish Interval (PI)</th><th>Maximum Number of Total Subscriptions(1)</th></tr>
<tr><td>2</td><td>0</td><td>PI ≥ 1000 ms</td><td>8</td></tr>
<tr><td>1</td><td>2</td><td>PI ≥ 1000 ms</td><td>8</td></tr>
<tr><td>0</td><td>2</td><td>PI ≥ 500 ms</td><td>8</td></tr>
<tr><td>0</td><td>3</td><td>PI ≥ 500 ms</td><td>8</td></tr>
<tr><td>0</td><td>4</td><td>PI ≥ 500 ms</td><td>8</td></tr>
</table>
(1) Maximum number of total subscriptions. This parameter acts as a global maximum for the FDC280.

When using Modicon M580D, SE EAE AsRock IPC, or the Foxboro DCS OPC UA Server, only Publish Interval (PI) ≥ 1000 ms is supported.</td></tr>
<tr><td>Number of Points</td><td>The FDC280 used with an OPC UA Server can support up to 8,000 DCI blocks, subject to performance limitations.

The FDC280 used with multiple OPC UA Servers can support up to 7,000 DCI blocks maximum, subject to performance limitations.</td></tr>
<tr><td>Data Rate Change in OPC UA Server</td><td>10% of the total configured DCI blocks (for all the supported configurations)</td></tr>
<tr><td>Control Block Support</td><td>The FDC280, used with the OPC UA Client Driver, supports the Foxboro DCS Equipment Control Block (ECBs) and DCI blocks.</td></tr>
<tr><td>ECBs Supported by the Driver</td><td>ECBP: Primary ECB, representing the FDC280’s Ethernet port
ECB200: Parent ECB, representing the OPC UA Client Driver
ECB201: Child ECB, representing an OPC UA Server</td></tr>
<tr><td>OPC UA Server Name Space Configuration</td><td>Supports up to 10 different Namespace URIs and Up to 256 characters for a Namespace URI in OPC UA Server.
Supports Mapping of OPC UA Tags using any of the following types of Node Identifiers:
String Node Identifier up to 128 characters long.
Numeric Node Identifier up to 128 characters long.
GUID Node Identifier up to 128 characters long.
OPAQUE Node Identifier up to 128 characters long.</td></tr>
<tr><td>Deadband supported by the driver</td><td>Supports the following deadband configuration options:
Absolute deadband
Percentage deadband
None</td></tr>
<tr><td>Time stamping options supported by the driver</td><td>Support the following modes of time stamping:
OPC UA Server Time Stamping</td></tr>
</table>

	• Source Time Stamping • FDC280 Time Stamping
DCI Blocks Supported by the OPC UA Client Driver	• BIN: Binary Input DCI block • BOUT: Binary Output DCI block • BINR: Redundant Binary Input DCI block • IIN: Integer Input DCI block • IOUT: Integer Output DCI block • IINR: Redundant Integer Input DCI block • PAKIN: Packed Input DCI block • PAKOUT: Packed Output DCI block • PAKINR: Redundant Packed Input DCI block • PLSOUT: Pulse Output DCI Block • RINR: Redundant Real Input DCI block • ROUT: Real Output DCI block • RINR: Redundant Real Input DCI block • STRIN: String Input DCI block • STROUT: String Output DCI block
Security Features	• Supports Application Authentication using self-signed certificates. • Supports the following modes of user authentication: ◦ Anonymous User ◦ Username and Password • Supports Security mode as None, Sign, and Sign & Encrypt. Supports the following security policies: • 6.5.123 SecurityPolicy – None • 6.6.162 SecurityPolicy – Basic128Rsa15 • 6.6.163 SecurityPolicy – Basic256 • 6.6.164 SecurityPolicy - Aes128-Sha256-RsaOaep • 6.6.165 SecurityPolicy – Basic256Sha256 • 6.6.166 SecurityPolicy - Aes256-Sha256-RsaPss
Part Numbers	• FDC280 OPC UA Client driver – Model K. K0177EC

Related Documents

Document
EcoStruxure™ Foxboro™ DCS Field Device Controller 280 (FDC280) (PSS 41H-2FDC280)
EcoStruxure™ Foxboro™ DCS FDC280 OPC UA Client Driver User's Guide (B0700WJ)
EcoStruxure™ Foxboro™ DCS Field Device Controller 280 (FDC280) User's Guide (B0700GQ)

Schneider Electric Systems USA, Inc.
70 Mechanic Street
Foxboro, Massachusetts 02035–2040
United States of America

Global Customer Support: https://pasupport.se.com

As standards, specifications, and design change from time to time, please ask for confirmation of the information given in this publication.

© 2023–2026 Schneider Electric. All rights reserved.

PSS 41S-3FDCOPC, Rev C