Foxboro™ DCS

Control Editors

PSS 41S-10EDITOR

Product Specification

November 2025

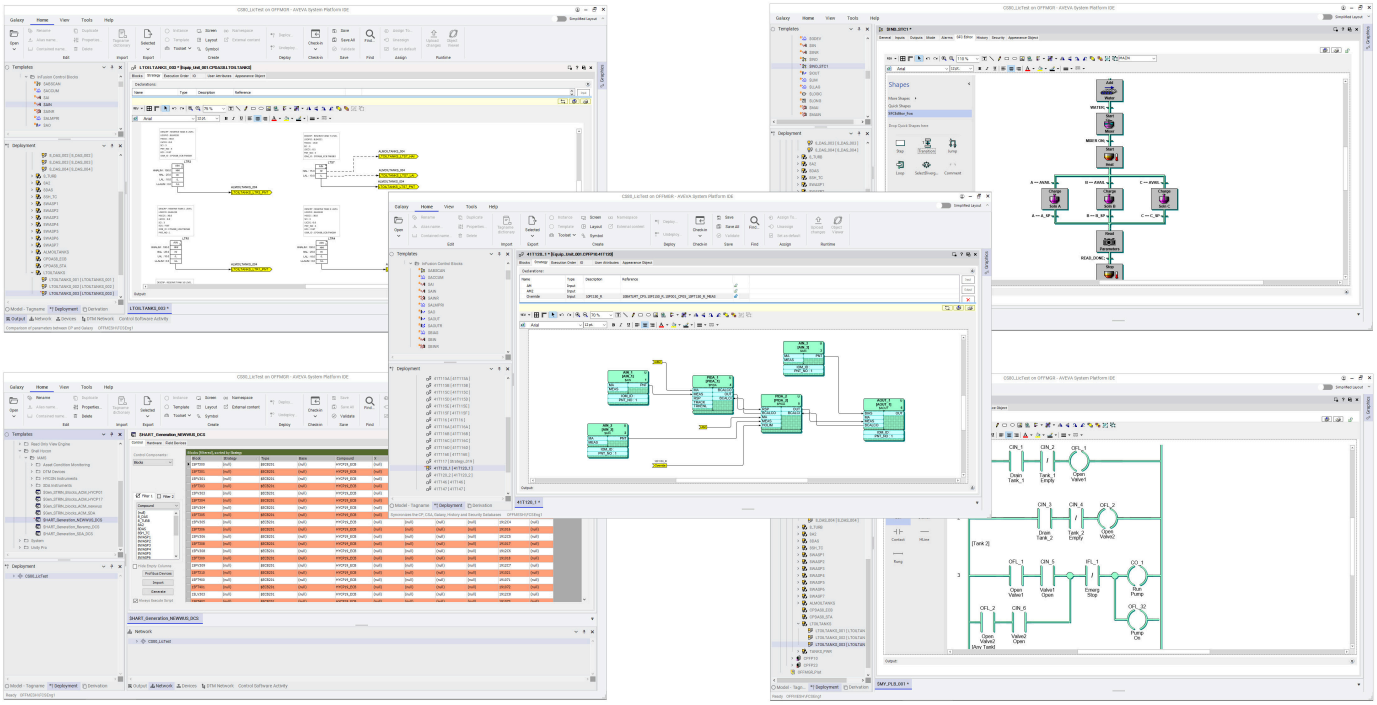

https://www.se.com

Legal Information

The information provided in this document contains general descriptions, technical characteristics and/or recommendations related to products/solutions.

This document is not intended as a substitute for a detailed study or operational and site-specific development or schematic plan. It is not to be used for determining suitability or reliability of the products/solutions for specific user applications. It is the duty of any such user to perform or have any professional expert of its choice (integrator, specifier or the like) perform the appropriate and comprehensive risk analysis, evaluation and testing of the products/solutions with respect to the relevant specific application or use thereof.

The Schneider Electric brand and any trademarks of Schneider Electric SE and its subsidiaries referred to in this document are the property of Schneider Electric SE or its subsidiaries. All other brands may be trademarks of their respective owner.

This document and its content are protected under applicable copyright laws and provided for informative use only. No part of this document may be reproduced or transmitted in any form or by any means (electronic, mechanical, photocopying, recording, or otherwise), for any purpose, without the prior written permission of Schneider Electric.

Schneider Electric does not grant any right or license for commercial use of the document or its content, except for a non-exclusive and personal license to consult it on an "as is" basis.

Schneider Electric reserves the right to make changes or updates with respect to or in the content of this document or the format thereof, at any time without notice.

To the extent permitted by applicable law, no responsibility or liability is assumed by Schneider Electric and its subsidiaries for any errors or omissions in the informational content of this document, as well as any non-intended use or misuse of the content thereof.

Overview

The Control Editors leverage AVEVA's user interfaces to provide intuitive methods to edit and deploy control block data. The Strategy Editor Area provides a visual canvas to draw control strategies and block editors with parameters.

The Control Editors enable the user to design EcoStruxure Foxboro DCS control strategies and application objects.

Control strategies are assigned to compounds, which are in turn assigned to individual control stations.

- A control station is the hardware platform that executes the regulatory, sequential, logical, and supervisory control strategies contained in a compound assigned to the station.
- A compound is the top level and is assigned to a physical control station. The compound contains a collection of user-designed strategies.
- A control strategy (or strategy) is a composite object representing a functional, reusable control entity. The strategy is a collection of blocks and inner strategies that are typically linked together. A strategy might be instantiated as a control entity such as a loop.
- A block is the fundamental control element and represents a specific type of control function. Foxboro DCS supports more than 100 different control blocks.

Features

- Configurable permissions and actions to help secure configuration database
- Graphical construction and deployment of Foxboro DCS control strategies
- Graphical support for programmable block logic (ladder logic, PLB, CALC, HLBL)
- Construction of re-usable control strategy component and composite designs
- User-defined renderings of reusable control strategy components and composites, including standard Scientific Apparatus Makers Association (SAMA) symbols
- Printed reports of control strategy drawings and supporting information
- Microsoft® SQL Server® and Microsoft Excel® reporting interfaces for configuration data
- Flexible, intuitive Excel interface to edit configurations
- Live updates/edits of real-time values superimposed on control strategy drawings to help debug configurations without the human-machine interface (HMI)
- Bulk generation of control strategies from stored templates and external project data
- Bulk migration of control strategies from installed I/A Series® and Foxboro DCS
- Ability to import and export control strategy designs
- Ability to create and deploy ArchestrA® IAS platforms, engines, application objects
- Support for configuring FOUNDATION fieldbus and PROFIBUS-based intelligent devices and fieldbus networks
- Remote Desktop Services

Benefits

The Control Editors offer substantial engineering productivity and quality gains to application designers and project engineers during:

- Initial project engineering through programmatic interfaces to third-party applications and external file systems supporting XML information exchange
- All project lifecycle stages, where the documentation is kept in synch with the configuration, as modifications are made
- Large scale expansions and modifications to the current designs
- Interoperability with other Foxboro and third-party applications

They also offer enhanced value to those users who want to use the Foxboro DCS in more than one project. They provide the ability to migrate intellectual property from one installation to another with extensive tools to edit that intellectual property to fit the circumstances of the new project.

The Control Editors are useful to current users of Foxboro DCS who want to upgrade their existing system to the latest technology, using utilities that convert the intellectual property in their existing system to the paradigms of the new system. This can include graphical representations of control strategies.

Graphical editors within the configuration tool set utilize and take advantage of the Microsoft Visio® application as the rendering engine.

The Control Editors provide graphical design, configuration, deployment and commissioning tools for systems using protocols such as PROBIFUS and FOUNDATION Fieldbus (FF).The graphical design tool for Strategy construction is shown in this figure.

The server for the Control Editors supports concurrent client access with record locking.

Figure 1 - Control Editors Navigation

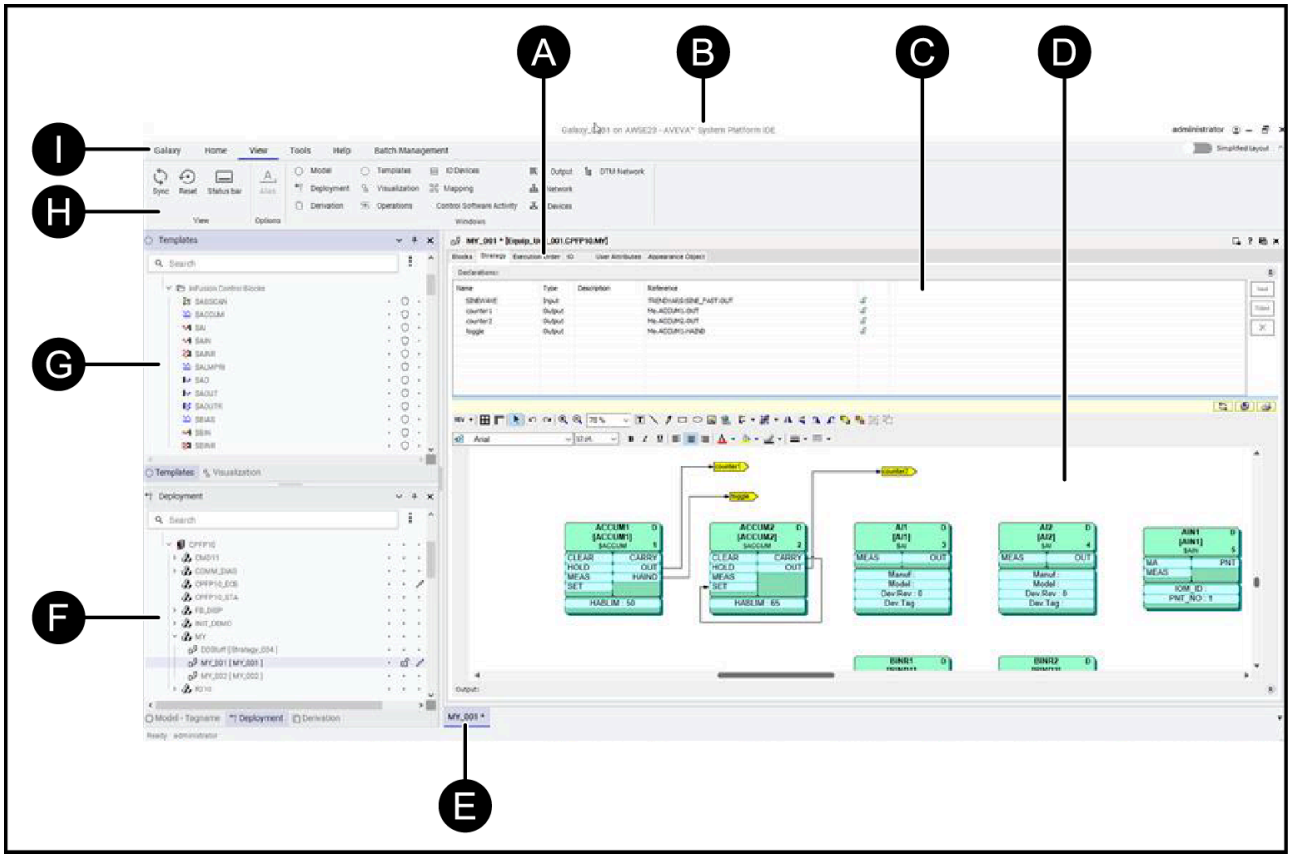

A	Strategy View Tabs
B	Title Bar
C	Strategy Input and Output Declarations
D	Strategy Editor
E	Strategy Drawing Window Tabs
F	Deployment View
G	Template Toolbox
H	Tool Bar
I	Menu Bar

Strategy Construction

Strategies are encapsulated and reusable control applications that can be combined to build an overall plant control. A new strategy is developed by deriving a new template or instance from the base or derived strategy, naming it, and opening it. This creates a new drawing canvas for constructing the strategy. Base or user-derived block templates are dropped onto the drawing canvas and linked together by connecting exposed parameters on the blocks using a line drawing. Strategy connectors (inputs or outputs) are created and dropped onto the canvas and linked to block parameters. These connectors link strategies together either from an inner to outer strategy as discussed or from a peer-to-peer strategy connection, as shown in this image.

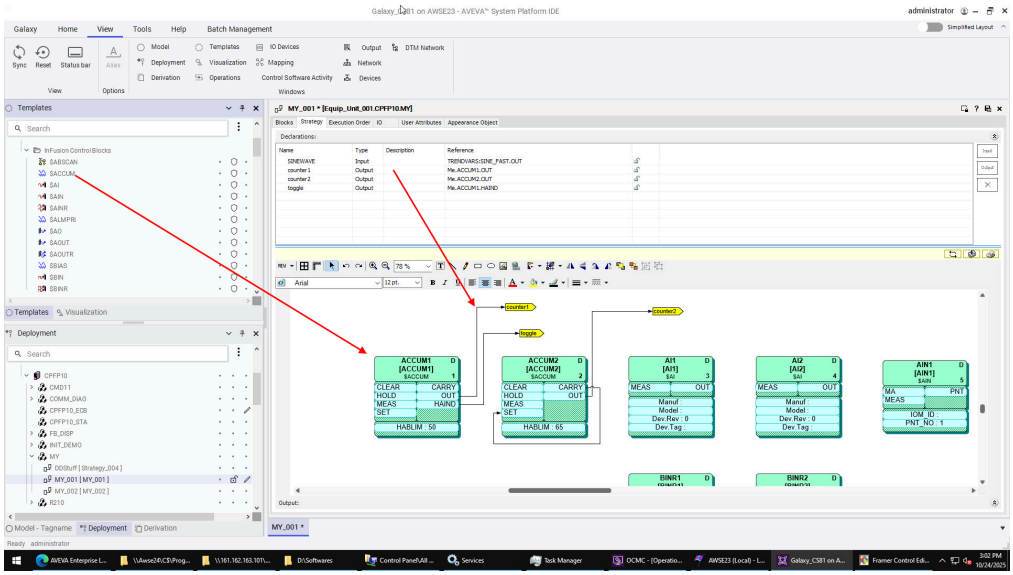

Live Data Updates on Strategy Diagrams

The Control Editors provide a graphical display that superimposes real time updated values at the connections between blocks in a deployed strategy. It also provides the capability to access deployed control strategies from the Strategy Editor.

Blocks/strategies are selectable for editing purposes. The user can then upload values in the target controller to the database or download settable parameters in the database to the target controller without implementing a deploy procedure.

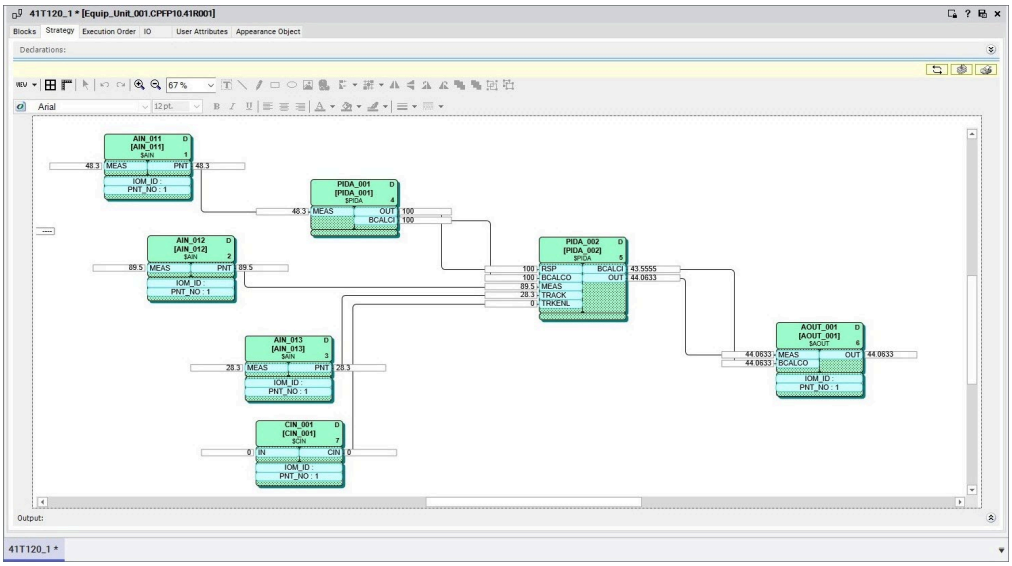

Block Properties and Behavior Specification

After a control strategy has been designed, its behavior and properties have to be specified. This primarily consists of specifying its constituent parts, namely base and user-derived blocks.

Blocks are available as either base or user-derived templates which are available for reuse in strategy templates or instances. In all cases specifying the properties and behavior of these blocks is the same.

A new Derived Block Template represents a specialization of the original block type. Typical examples include specializing a base Analog Input block template to represent an Iron-Constantan thermocouple input block type.

Figure 2 - Derived Thermocouple

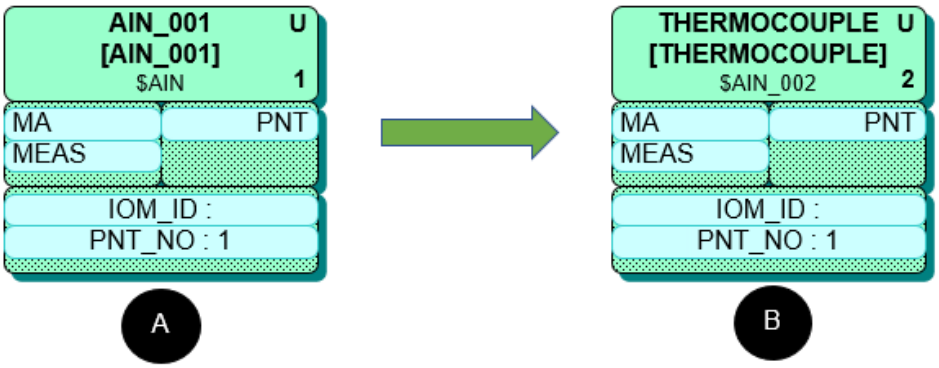

A	Base Analog Input Block Type
B	Derived Thermocouple Block Type

Other specializations include modifying the appearance or exposing certain features of various function blocks. One example would be to derive a base PIDA block into a specialized SAMA representation of a control entity.

Figure 3 - SAMA Representation

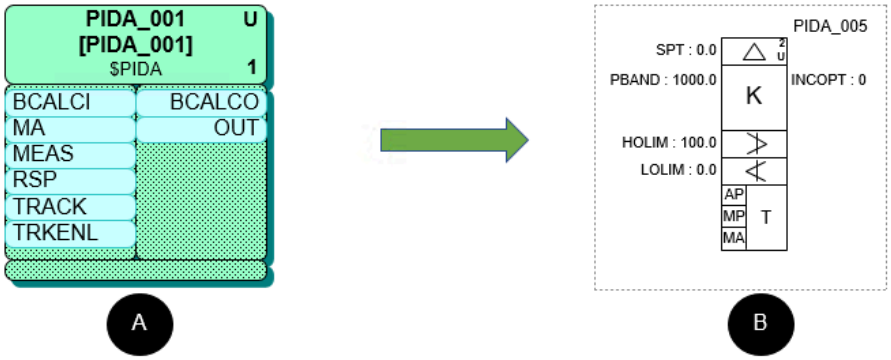

A	Base PIDA Control
B	Derived SAMA Control

Strategies

The Strategy Editor enables users to compose an overall strategy by combining smaller strategies, or building blocks. This specialization process enables the user to create libraries of strategy templates that are composed of sets of connected blocks.

To illustrate this capability, this figure shows an example where a Reactor Temperature Control Strategy template has been constructed from inner strategy templates called CasHOL and SplitRange. These inner strategy templates are formed from Foxboro DCS block types.

NOTE: The yellow connectors in the two inner strategies become connectable properties of the blocks in the outer strategy.

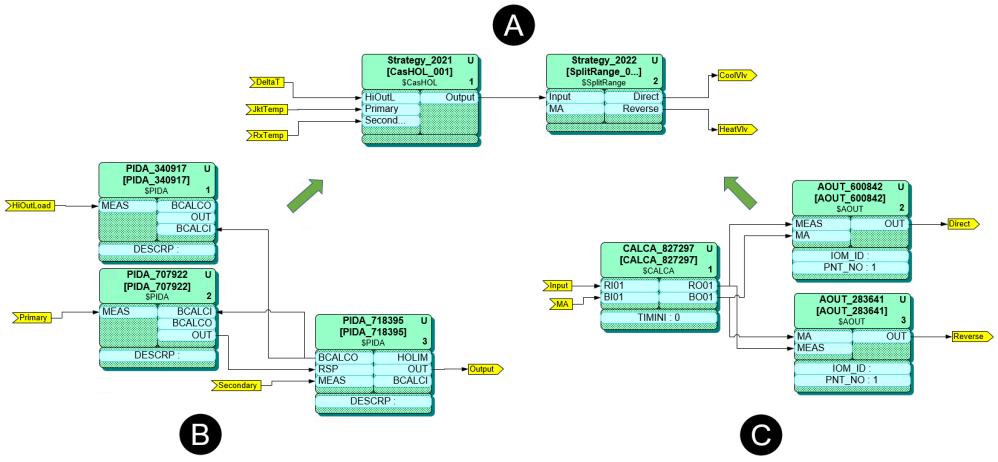

A	Reactor Temperature Control
B	Control with High Output Override
C	Split Range Control Valve

Programmable Block Editors

Foxboro DCS offers programmable block types, including:

- General purpose calculator style block types (MATH, LOGIC, CALC, CALCA).
- A series of block types programmed in the High Level Batch Language (HLBL).
- Block types programmed in Sequential Function Charts (FoxSFC).
- A block type that is programmed in a ladder logic diagram that executes in I/O modules.

The Control Editors provide a text editor for programming the HLBL and a graphical editor for programming FoxSFC and ladder logic diagrams.

Figure 4 - High Level Batch Language Editor

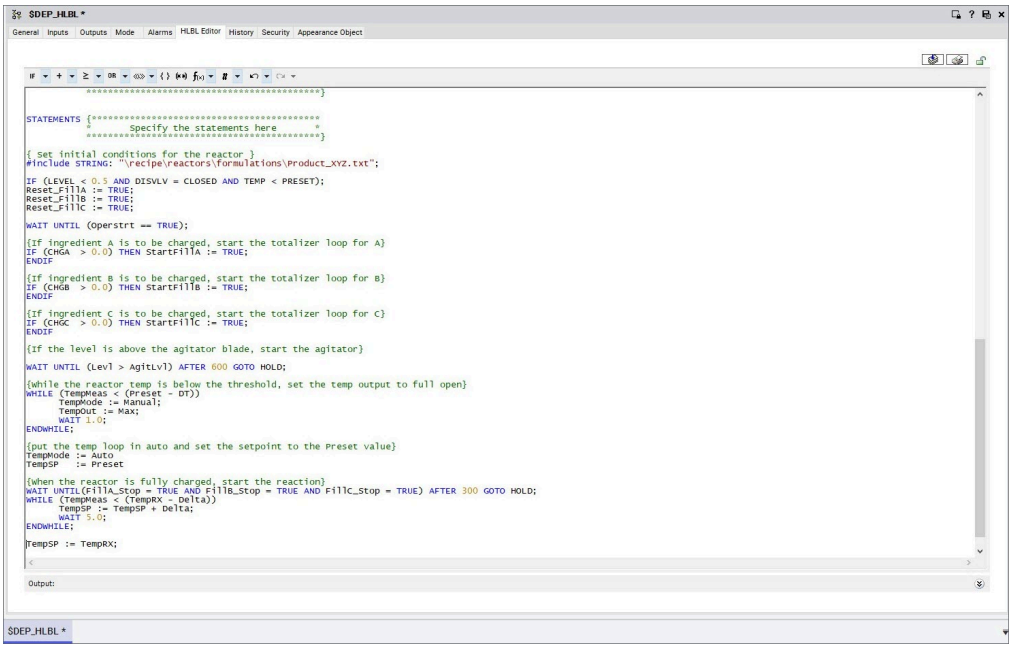

Figure 5 - Sequential Function Chart Editor

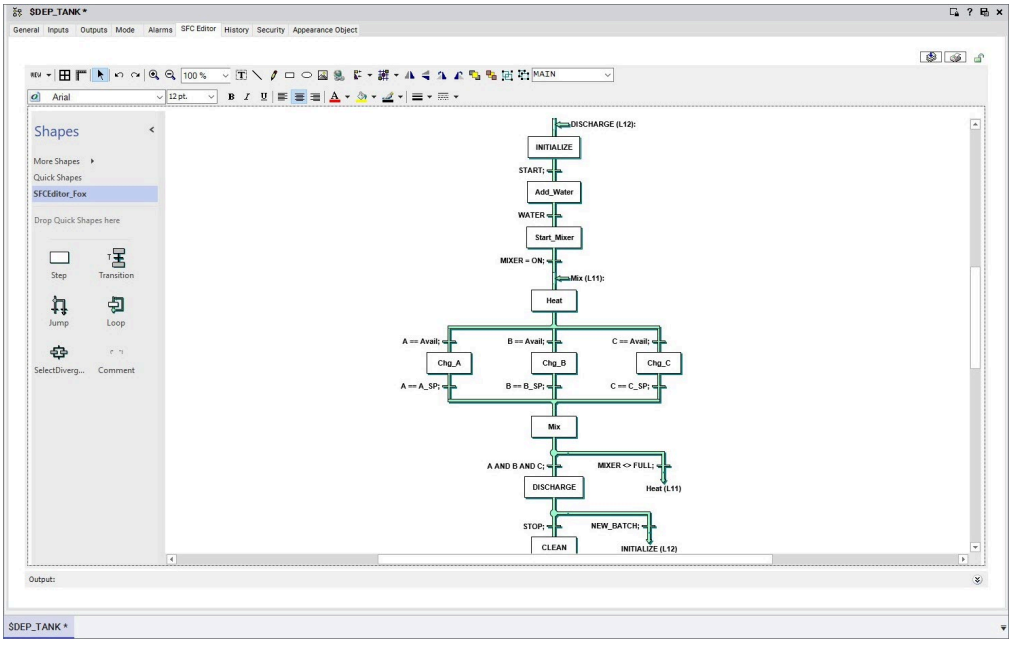

Figure 6 - Ladder Logic Diagram Editor

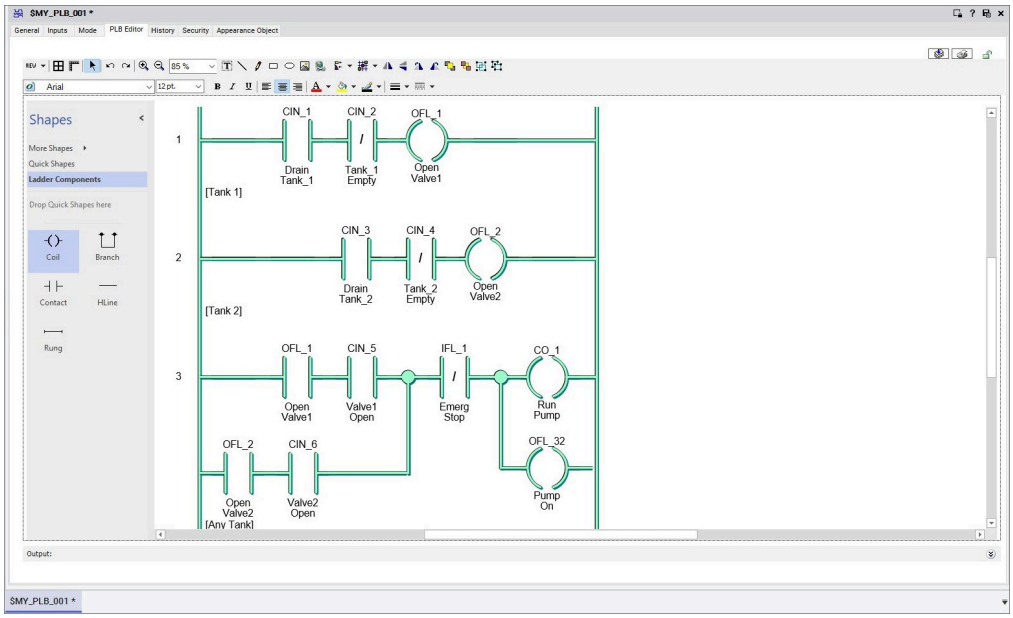

System Configuration

The Control Editors enable the user to construct a Foxboro DCS configuration, including control stations and Fieldbus Modules by instantiating these base types and renaming them according to user preferences. Then an engineer uses the Network View to assign these stations and modules to their designated unit areas.

This image shows five user defined unit areas in addition to the Unassigned Hardware node. These are Centrifugation, Purification, Reaction, Solvent Recovery, and Tank Farm. It further shows two workstations and three controllers assigned to the Reaction Area and two FBMs assigned to the RX0100 controller.

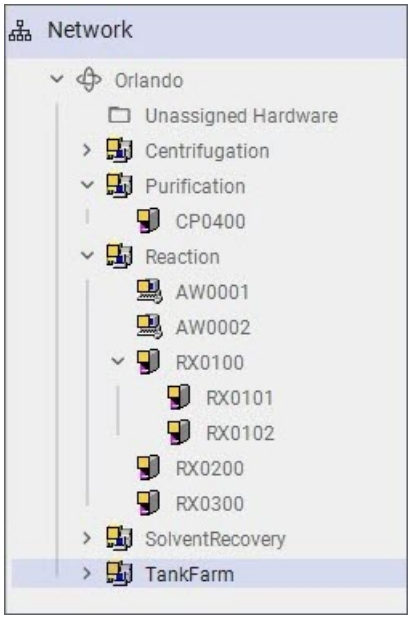

Intelligent Device Configuration

Control Editors support the access, configuration, monitoring, diagnostics, commissioning, and troubleshooting of digitized field devices connected using FOUNDATION FIELDBUS, HART, and PROFIBUS technologies. For more information, see:

- *EcoStruxure™ Foxboro™ DCS Field Device Expert for Foundation Fieldbus* (PSS 41S-10FDMFF)
- *EcoStruxure™ Foxboro™ DCS Field Device Expert for HART Devices* (PSS 41S-10FDMHRT)
- *EcoStruxure™ Foxboro™ DCS Field Device Expert for PROFIBUS-DP Devices* (PSS 41S-10FDMPB)

Bulk Generation of a Project

The Control Editors offer extensive engineering productivity tools such as the ability to bulk generate a project database from user defined templates combined with project specific information stored in formats like Microsoft® Excel® or CSV, SaveAll, IACC Export, SysDef Export, or in a proprietary XML document.

The Control Editors can also migrate control strategies stored in the existing Foxboro DCS installations from the data stored in existing control stations. The bulk data is first imported into a data grid allowing the user to inspect it and make any necessary additions or modifications.



Bulk generation has the capability for applying Visual Basic® scripts to selected portions of the grid such as specific strategies or compounds to make bulk edits to the information. After the user is satisfied with the structure and content, this grid is used to generate the requisite control strategies and system configuration.

Control Strategy Deployment

After a strategy is correctly assigned to a compound and the compound to a controller, it can be deployed using commands selected from the object in the Deployment View, or one of the other Control Editors' Application Views.

The targets updated in the deployment include:

- Compounds and blocks are downloaded to the Foxboro DCS, including the assigned controller and the Compound Summary Access (CSA).
- Security access settings for compound and block attributes are loaded into ArchestrA Security.
- ArchestrA History is updated with the collection points configured in the compounds and blocks.

When a strategy or compound is later modified using the Control Editors, it needs to be re-deployed to implement the changes in the runtime system. When a strategy or compound is re-deployed, only the affected targets are updated, and only the modified parameters are downloaded.

Concurrent Access to the Database

The Control Editors support multiple clients concurrently accessing the database via Remote Desktop Services. Networked clients execute their application independently from the server and only communicate when a client session is opened or closed. Remote Desktop Services use the resources of the server to perform their operations and remote clients to provide a user interface. These utilize different resources within the network architecture and can be used in combination to achieve optimal performance.

User Defined Application Objects

The Control Editors enable the user to construct application objects and deploy them to the Foxboro DCS Control Software Application Environments hosted by ArchestrA Industrial Application Servers. These are created by the Galaxy Repository. This image depicts an OLEDB database application created as an application object.

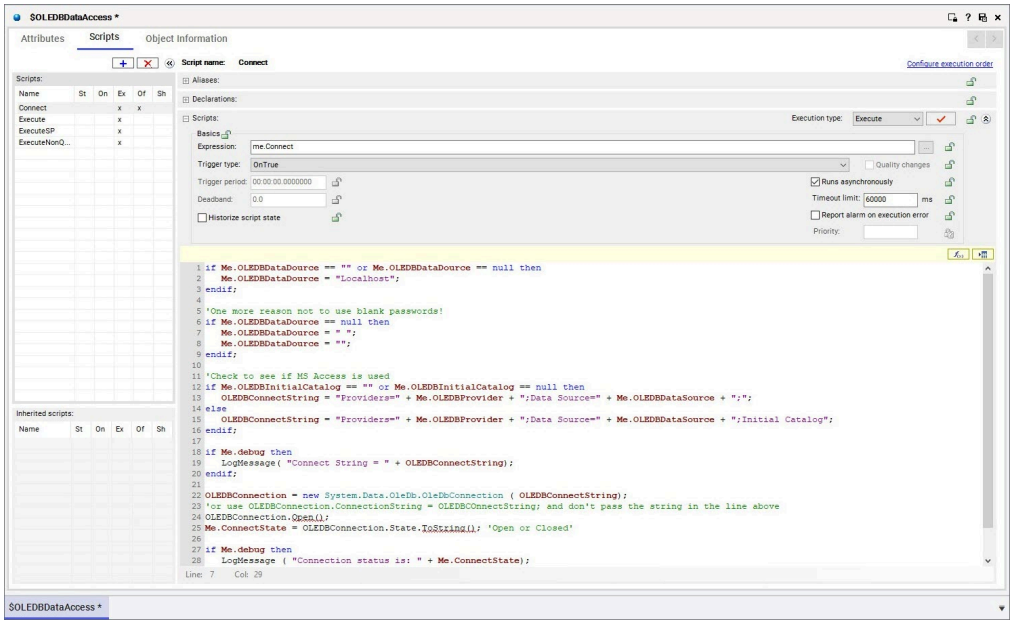

Access Security

The Control Editors use an ArchestrA role-based security model where users subscribe to different roles depending upon their job requirements. Roles have associated access permissions and security groups. Security groups have various plant areas assigned to them.

A user's subscription to a particular role provides access to specific security groups (plant areas) with specified access permissions (for example, Operate and Secured Write) in those groups.

The authentication process is `user_name` and `password`.

The security model can be locally based or tied to the operating system of the hosting computer or to a Microsoft Active Directory® setup (recommended). If Microsoft Active Directory is used, you must have at least two redundant domain controllers.

Change Tracking

The Control Editors provide an integration with the Change Tracking feature of System Advisor for Foxboro DCS and FoxCTS Change Tracking software. All control configuration and program changes deployed to control processors from the Control Editors are reported to connected software to provide tracking of control system changes to help meet regulatory body requirements. Examples of program changes include HLBL or FoxSFC program changes in Sequence Blocks or Ladder Logic Diagram (LLD) program changes in PLB Blocks.

Hardware and Software Specifications

Recommended Sizing Requirements

Table 1 - Minimum Sizing Requirements for All Machine Types

Device/Role	RAM	Hard Drive
Remote Desktop Services	16 GB minimum. 32 GB recommended.	150 GB Minimum (a)
Control Software Galaxy	16 GB minimum. 32 GB recommended.	250 GB Minimum
Control Software Historian	16 GB minimum. 32 GB recommended.	500 GB Minimum
All other roles	16 GB minimum. 32 GB recommended.	150 GB Minimum

(a) For the Control HMI based remote desktop services VM:

- With the increase of managed applications and more data on remote desktop servers, there is a need to increase the size of the `C:` partitions. For each remote desktop user, 3 GB of space is required for managed applications on the `C:` drive partition. For more information on how to configure/extend a drive, see *EcoStruxure™ Foxboro™ DCS Control Software Deployment Guide* (B0750BA).
- When configuring virtualization host servers, you must take into account the requirements for all individual virtual machines that will run on the virtualization host server.

Control Editors Server and Client Specifications

Operating System	Windows Server IoT 2022 or Microsoft Windows 10 IoT Enterprise LTSC 2021 64-bit Edition
Computer Hardware	Foxboro DCS-qualified computer hardware (for example, D96, H90, H92, H94, V91, or V95)
Communications Network	100 Mbps TCP/IP Switched Ethernet

Related Documents

Topic	Document
Control HMI	*EcoStruxure™ Foxboro™ DCS Control HMI Application* (PSS 41S-10HMI)
Field Device Expert	*EcoStruxure™ Foxboro™ DCS Field Device Expert for Foundation Fieldbus* (PSS 41S-10FDMFF)
	EcoStruxure™ Foxboro™ DCS Field Device Expert for HART Devices (PSS 41S-10FDMHRT)
	EcoStruxure™ Foxboro™ DCS Field Device Expert for PROFIBUS-DP Devices (PSS 41S-10FDMPB)
Logic Blocks	*Foxboro Evo™ Logic Block Editor and Live Data Display* (PSS 31S-10LBEDIT)
Scripting	*Foxboro Evo™ Scripting with Direct Access* (PSS 31S-10SCRIPT)

Schneider Electric Systems USA, Inc.
70 Mechanic Street
Foxboro, Massachusetts 02035–2040
United States of America

Global Customer Support: https://pasupport.se.com

As standards, specifications, and design change from time to time, please ask for confirmation of the information given in this publication.

© 2015–2025 Schneider Electric. All rights reserved.

PSS 41S-10EDITOR, Rev F