Foxboro™ DCS

Control Network Architecture

PSS 41H-7NETWORK

Product Specification

January 2025

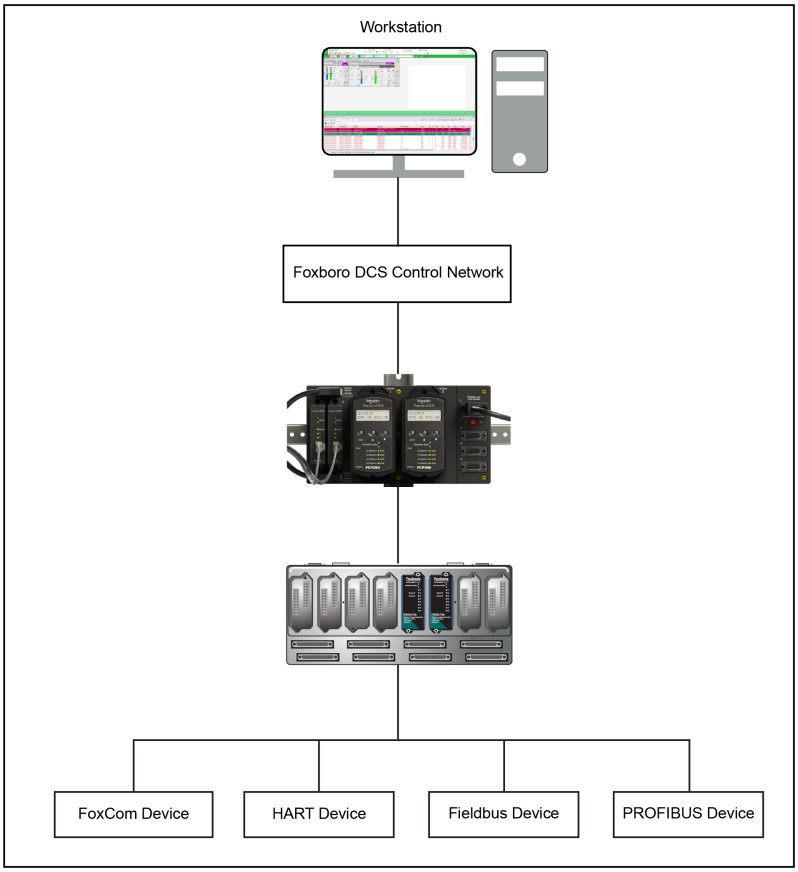

https://www.se.com

Legal Information

The information provided in this document contains general descriptions, technical characteristics and/or recommendations related to products/solutions.

This document is not intended as a substitute for a detailed study or operational and site-specific development or schematic plan. It is not to be used for determining suitability or reliability of the products/solutions for specific user applications. It is the duty of any such user to perform or have any professional expert of its choice (integrator, specifier or the like) perform the appropriate and comprehensive risk analysis, evaluation and testing of the products/solutions with respect to the relevant specific application or use thereof.

The Schneider Electric brand and any trademarks of Schneider Electric SE and its subsidiaries referred to in this document are the property of Schneider Electric SE or its subsidiaries. All other brands may be trademarks of their respective owner.

This document and its content are protected under applicable copyright laws and provided for informative use only. No part of this document may be reproduced or transmitted in any form or by any means (electronic, mechanical, photocopying, recording, or otherwise), for any purpose, without the prior written permission of Schneider Electric.

Schneider Electric does not grant any right or license for commercial use of the document or its content, except for a non-exclusive and personal license to consult it on an "as is" basis.

Schneider Electric reserves the right to make changes or updates with respect to or in the content of this document or the format thereof, at any time without notice.

To the extent permitted by applicable law, no responsibility or liability is assumed by Schneider Electric and its subsidiaries for any errors or omissions in the informational content of this document, as well as any non-intended use or misuse of the content thereof.

Overview

When designing and installing an EcoStruxure Foxboro DCS, you can tailor the Control Network architecture to minimize the total installed cost. The control network supports communication among Foxboro DCS controllers, workstations, and servers. In many cases, a straightforward linear network can be established to serve the needs of the entire system. As systems grow or are installed across a larger physical location, the network can be arranged to minimize the number of cables to be installed. The Foxboro DCS Control Network uses widely used, commercial off-the-shelf technology, allowing for comprehensive technical support and high reliability.

The EcoStruxure Foxboro DCS Control Network consists of a number of Ethernet switches connected in either Standard or Enhanced Network Configuration.

Both control network configurations allow high availability by providing redundant data paths that help eliminate single points of vulnerability.

The control network provides multiple communication paths between any two devices or stations connected to the network. This network architecture reduces network complexity, cost, and maintenance requirements.

The architecture's flexibility allows you to design a network configuration that fits the needs of the control system and the end users' geographical topology. Configurations can be as simple as a workstation and controller connected with a linear network, or as complex as a multi-switch, fully meshed Ethernet network, communicating at speeds up to 10 Gigabit per second over a very large location.

The control network architecture integrates powerful control stations and workstations (end devices) in a 100 Mb/1 G/10 G Ethernet network. These control stations, workstations, and networks comprise scalable systems for process monitoring, process control, and integration with industrial information management systems.

High speed, coupled with a high level of redundancy and peer-to-peer characteristics, allows for advanced system performance and availability.

Features

The control network offers:

- Ethernet switches with 8 ports or more in a linear, ring, star, inverted tree, or modified inverted tree network topology allows for system scalability
- Ethernet switches connected in a control network configuration (up to 1920 Foxboro stations including switches)
- Support for Fast Ethernet (100 Mbps) and Gigabit for Ethernet server class workstations (1000 Mbps)
- Modular uplinks to high-speed backbones using:
  - 1 Gigabit 1000Base-T, 1000Base-SX, 1000Base-LX/LH, 1000BaseLX, 1000Base-BX, and 1000Base-ZX standards
  - 10 Gb 10GBase-SR, 10 Gb 10GBase-LR, 10 Gb 10GBase-LRM, 10 Gb 10GBase-ZR using SFP+ ports or QSFP to SFP adapters
- Software in every station allows for management of the redundant Ethernet ports in response to disruptions in the network communication paths
- Rapid Spanning Tree Protocol (RSTP), allowing management of the redundant Inter-Switch Link () Ethernet ports and providing high speed network convergence time.
- Network Switch configurations are downloaded through the switches Command Line Interface (CLI), allowing for Virtual Local Area Networks (VLANs), separating the control network into multiple segments. You can configure a total of six VLANs. VLANs configured for non-Foxboro DCS communications can only be configured for TCP and UDP protocol use.
- Full-duplex operation based on the IEEE 802.3 standards
- Network monitoring is provided via SNMP Ethernet protocols
- System Management software for monitoring the health of the control network and managing equipment in the system

Switched Ethernet Characteristics

Standard Fast Ethernet switches and fiber optic or copper cabling provide versatile, low-cost solutions for building Ethernet networks using industry standard protocols. The 8-port or larger managed Ethernet switches used in the control network allow connection of multiple control stations, workstations, and other Ethernet switches.

Network Topologies

The Foxboro DCS supports several basic control network topologies, including:

- Linear, page 5
- Ring, page 6
- Star, page 7
- Inverted tree, page 7
- Modified inverted tree, page 8

Each topology has unique features. The right topology for the control network depends on the specific requirements of the site or installation. The images in the topology topics provide examples of the different topologies, as well as recommendations on where they can be used.

NOTE: The images of switches and media converters are generic illustrations of networking concepts and do not necessarily reflect currently offered products. For the current product line of switches, see *EcoStruxure™ Foxboro™ DCS Control Network Ethernet Equipment* (PSS 41H-7NWEQUIP).

Network Configurations

The Foxboro DCS supports:

- Custom Configuration (typically used)
  - All switches in the preferred or available lifecycle
  - All topologies listed in Network Topologies, page 4
- Wizard Build Configuration, per defaulted configuration settings for FDCN

Linear Topology

This topology is appropriate for a small, two-switch network. In this example, any one component in the network becoming unavailable does not affect the operation of the remaining components due to system redundancy.

Figure 1 - Linear Topology

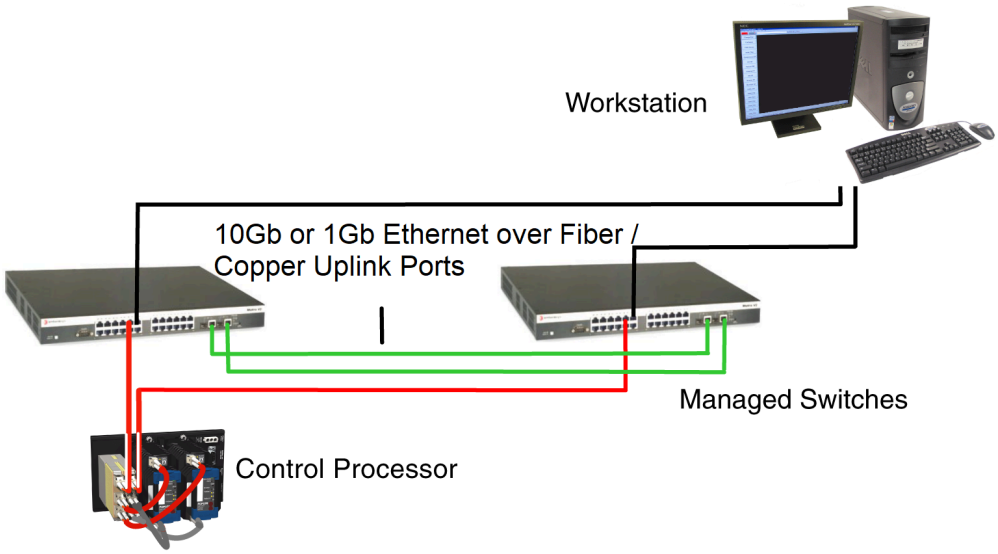

Ring Topology

This topology suits networks containing three-to-seven switches. Each switch is connected to the two adjacent switches. The primary and the backup root switches need to be defined when deploying the network switch configurations. If a switch is lost due to a detected failure, or removed for maintenance or a detected cable fault occurrence, the ring is broken and the network assumes the characteristics of the linear topology shown in Linear Topology, page 5.

This image shows a network composed of six managed switches configured in a ring. A network in this configuration is able to maintain its integrity in the event of a loss of:

- A cable to a control processor or workstation
- A loss of an Inter-Switch Link (ISL) within the network
- A switch within the network

Figure 2 - Ring Topology

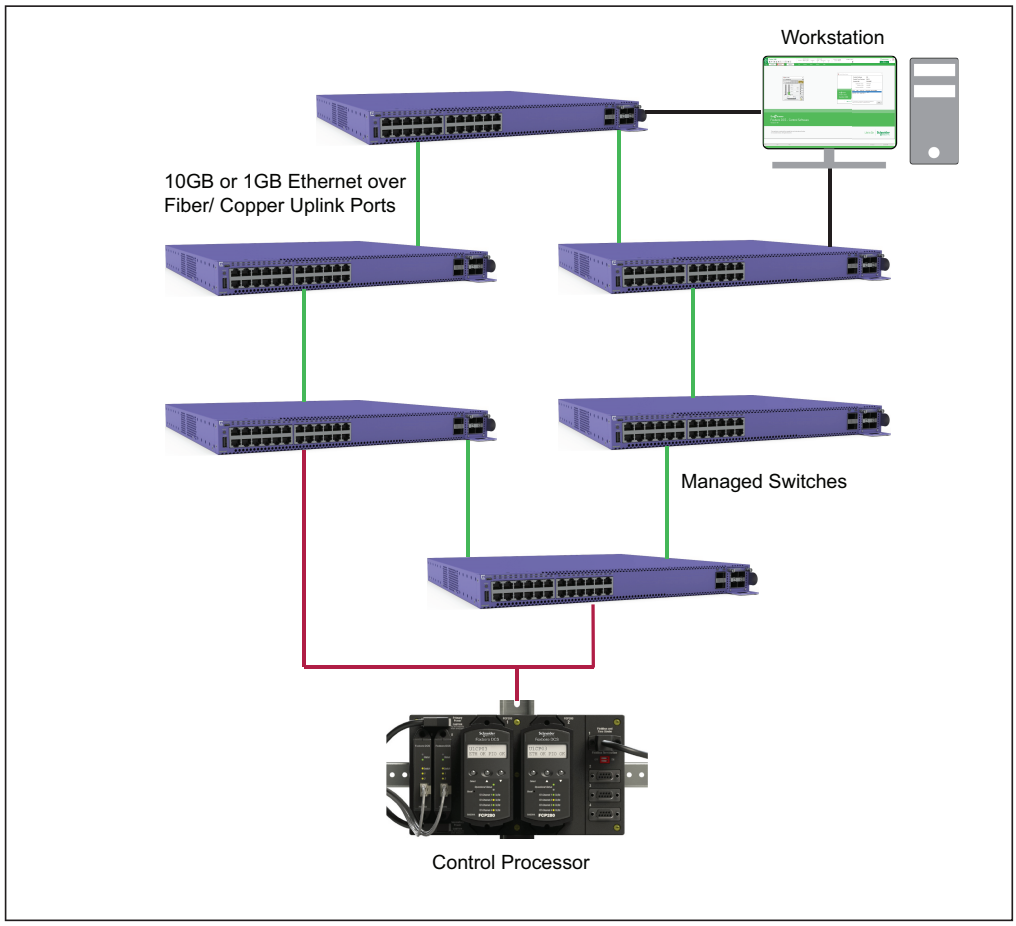

Star Topology

This topology is preferred for medium-sized and large-sized networks. In a star topology, the switches at the outside edge of the network are connected to each of the two root switches. The root switches are connected to each other and to the edge switches creating redundant data paths.

Redundant data paths allow the network to continue to operate if any one component is lost due to a detected failure, or detected cable occurrence, or is removed from the network for maintenance.

The star topology can support up to 50 edge switches, depending on the switch series selected.

When designing a systems control network, see *EcoStruxure™ Foxboro™ DCS Control Network Architecture Guide* (B0700AZ) and *EcoStruxure™ Foxboro™ DCS Switch Configurator Application Software (SCAS) for the Control Network User's Guide* (B0700CA).

NOTE: This image is drawn for simplicity and does not reflect all Inter-Switch Link (ISL) connections.

Figure 3 - Star Topology

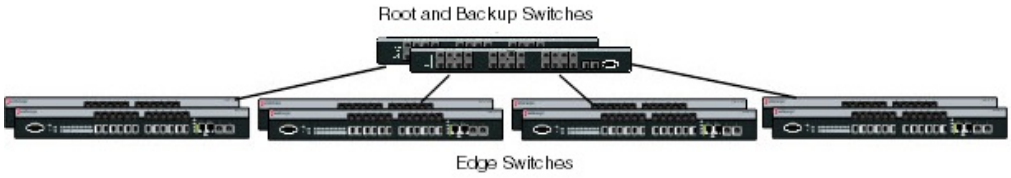

Inverted Tree Topology

This topology suits very large networks with specific physical constraints. In this topology, the switches are arranged in tiers, with the root switches in the top tier (Tier 1) and up to three tiers below them. The root switches are redundant and are interfaced to the tier below (Tier 2). All other switches (distribution and edge) are individually connected to two of the switches in the tier above.

An inverted tree topology design can be as simple as three pairs of switches over three tiers, or as complicated as needed when deployed across a site's required geographical topology (not exceeding seven hops, which are defined as RSTP links between switches).

There can be no more than four-tiers of switches (including the root switches) in order to comply with the Foxboro DCS requirement, limiting the number of switches between devices to seven.

NOTE: This image is drawn for simplicity and does not reflect all Inter-Switch Link (ISL) connections.

Figure 4 - Inverted Tree Topology

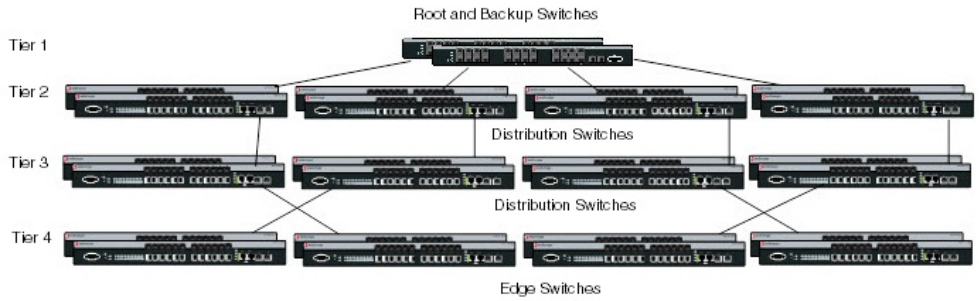

Modified Inverted Tree Topology (MITT)

This topology is similar to the inverted tree topology but allows for root switch redundancy.

In this topology, the root and backup root switches have redundancy through the core (distribution) switches if both root switches are lost due to a detected failure. If both root switches are unsuccessful, the designated core switch assumes the root functionality, keeping the communication between the network end devices intact.

Redundant data paths allow the network to continue to operate if any one component is lost due to a detected failure. This allows end devices to be interfaced at different tiers within the network, so the loss of a network device within the network itself has minimum impact on communication between end devices.

The MITT can be no more than three tiers of switches (including the root) in order to comply with Foxboro DCS requirements.

This image shows the 52-port switch (RH102BG) as the core switches with 1 Gb Inter-Switch Link (ISL). You can use the 26-port switch (RH102BF) as the core switches with 1 Gb or 10 Gb inter-switch links. You can deploy the MITT with any switch class supporting multiple (more than four) ISL (1 Gb/10 Gb) ports, when deployed as a core switch, all switch types can be deployed as edge switches in the MITT.

Figure 5 - Modified Inverted Tree Topology

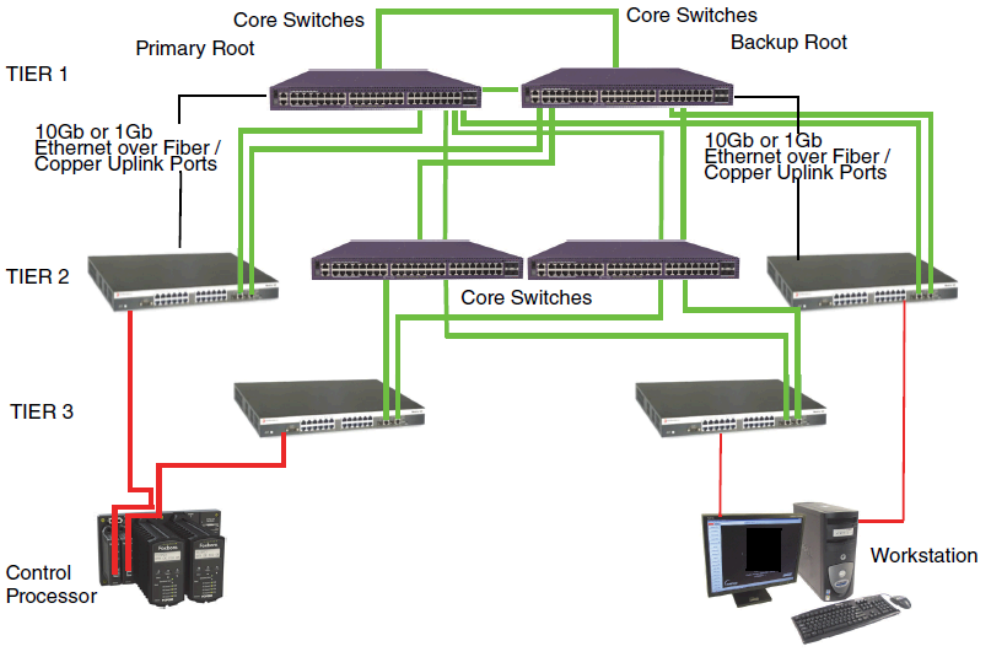

The Foxboro DCS Control Network Connectivity

The control network uses Fast Ethernet switches, which are configured to form a highly robust redundant network.

The Foxboro DCS Control Network provides 62.5µ fiber optic (100Base-LX/LH @ 1310 N-m) or RJ-45 CAT5 at 100 Mbps over Fast Ethernet for device connectivity. Both are supported using fixed ports or SFP MGBICs (switch class dependent).

The Foxboro DCS Control Network also provides 62.5µ fiber optic (MMF) or 9µ fiber optic (SMF) (We recommend utilizing OM4 50µ fiber (MMF) for Inter-Switch Links (ISL) to achieve higher bandwidth limits), depending on the module selected (1000Base-SX, 1000Base-LX, 1000Base-LX/LH, 1000Base-ZX, 1000Base-BX) or RJ-45 CAT5e at 1000 Mbps for server class device connectivity. Both are supported using SFP MGBICs, although RJ-45 can also be supported using fixed ports (switch series dependent).

The Foxboro DCS Control Network also provides 10 Gb supported on 62.5µ fiber optic (MMF) or 9µ fiber optic (SMF) (we recommend utilizing OM4 50µ fiber (MMF) for Inter Switch Links (ISL) to achieve higher bandwidth limits), depending on the module selected (10GbBase-SR, 10GbBase-LR, 10GbBase-LRM, 10GbBase-ZR, and 10GbBase-T using SFP+ ports or QSFP to SFP adapters).

The Foxboro DCS Field Control Processor 280 (FCP280) is a single or fault-tolerant control processor mounted on a baseplate and provides a communication interface between the FBMs and the control network. The stations (end devices) are connected to the control network using 62.5µ fiber optic (100Base-LX/LH @ 1310 N-m) or RJ-45 CAT5 cables at 100 Mbps over Fast Ethernet.

Foxboro DCS Fieldbus Modules (FBMs) serve as an interface between the field devices and the Foxboro DCS control station. They perform the necessary data conversion, providing support for analog measurement, discrete sensing, analog or discrete control, and digital communication.

Functional Specifications

Number of Foxboro Stations and Switches	Foxboro DCS stations including Ethernet switches: • Up to 1920, including switches (FCM100Et and FCM100E not included) • Up to 500 switches
Number of IP Addresses	Up to 10,000, including switches, controllers, workstations, ATSs, FCM100Ets, and FCM100Es
Standards Supported	• Full-duplex operation • 100 Mbps and 1000 Mbps copper and fiber connectivity for end devices • Modular (Inter-Switch Link (ISL)) uplinks using 1 Gigabit and 10 Gigabit 1000Base-T, 1000Base-SX, 1000Base-LX/LH, 1000Base-LX, 1000Base-ZX, 1000Base-BX 10GbBase-SR, 10GbBase-LR, 10GbBase-LRM, and 10GbBase-ZRusing SFP+ ports or QSFP to SFP adapters. • Standard Virtual Local Area Networks (VLANS) port based 802.1Q • Six configurable VLANs • VLAN 2 is dedicated for Foxboro DCS communications only • VLANs 3-7 are supported with the Foxboro DCS when configured for use only with the TCP and UDP protocols **NOTE:** When VLANs are configured, VLAN 1 is not used.
Maximum Number of Ethernet Switches Between Any Two Stations	Up to seven
Speeds Supported	End device connectivity (100 Mbps or 1000 Mbps) and (Inter-Switch Link (ISL)) uplink Gigabit Ethernet (1000 Mbps) or 10 Gigabit Ethernet (802.3ae)
Network Failover Time	A re-span (re-convergence) of the network is dependent on many factors: • The size of the network and its topology design • Vintage of the installed switches • Variable network traffic conditions Network recovery (re-convergence) is typically one second or less, but can take up to two seconds, depending upon these factors. This is achievable using fast Ethernet switches qualified and supplied by Foxboro and configured in accordance with Foxboro DCS documentation.

Loop Protect Algorithm (LPA)	The LPA feature is required for both the Custom Network Configurations and Wizard Build Configurations and all supported topologies on the control network. LPA monitors and isolates loop formations within a network. LPA uses type 2 Bridge Protocol Data Units (BPDU) (Rapid Spanning Tree Protocol (RSTP) or Multiple Spanning Tree Protocol (MSTP)) on point-to-point inter-switch links (Inter-Switch Link (ISL)) before their states are allowed to switch to the forwarding state. This function helps prevent data loops within the network. LPA monitors and isolates both upstream and downstream facing ports. You can deploy this feature across all switch types supported in the Foxboro DCS Control Network. For more information on deployment rules, see *EcoStruxure™ Foxboro™ DCS Switch Configurator Application Software (SCAS) for the Control Network User's Guide* (B0700CA). The LPA feature operates as a per port, per Multiple Spanning Tree (MST) instance. LPA must be enabled on all inter-switch links (ISL) ports that support this feature.
Protocols Used	• IEEE 802.1w Rapid Spanning Tree Protocol (RSTP) • IEEE 802.1d Spanning Tree • IEEE 802.3 Ethernet • IEEE 802.3u Fast Ethernet • IEEE 802.3z Gigabit Ethernet • IEEE 802.3ae 10 Gigabit Ethernet

Physical Specifications

Cable Lengths Interconnecting Stations	• CAT5e/CAT6 100Base-TX or 1000Base-T up to 100 m (328 ft) • Fiber Optic, 100Base-FX 100Base-FX MMF 62.5µ, up to 2 km (1.2 miles) • Fiber Optic, 1000Base-X (Server class stations only) 1000Base-SX MMF 62.5µ, up to 275 m (902 ft), or MMF 50u, up to 500m (1640 ft)
Cable Lengths Interconnecting Ethernet Switches	Fiber Optic, 1000Base-X • 1000Base-SX (RH102AG) MMF 62.5µ, up to 275 m (902 ft), or MMF 50µ (OM4) up to 500m (1640 ft) • 1000Base-LX/LH (P0972YQ) MMF 62.5µ, up to 2 km (1.2 miles), or MMF 50u (OM4) up to 1km (3.1 miles) • 1000Base-LX SMF 9µ, up to 10 km (6.2 miles) • 1000Base-ZX SMF 9µ, up to 80 km (49.6 miles) • 1000Base-BX Simplex-SMF 9µ, up to 10 km (6.2 miles), 40 km (24.8 miles), and 120 km (74.6 miles), depending on the module Fiber Optic, 10GbBase-X • 10GbBase-SR MMF 62.5µ, up to 33 m (108 ft), or MMF 50µ (OM4) 220 m (720 ft) • 10GbBase-LR SMF 9µ, 10 km (6.2 miles) • 10GbBase-LRM MMF 62.5µ, up to 33 m (108 ft), or MMF 50u (OM4) 220 m (720 ft) SMF 9µ, 300 m (984 ft) • 10GbBase-ZR SMF 9µ, 80 km (49.7 miles)
Cable Lengths Total Connection Length Allowed Between Switches	Fiber Optic 1000Base-X • Simplex-Single Mode Fiber (S-SMF) Up to 120 km (74.6 miles) • Single mode fiber (SMF) Up to 80 km (49.7 miles) • Multimode fiber (MMF) Up to 2 km (1.2 miles) • CAT5e/CAT6 Up to 100 m (328 ft)

Related Documents

Switch Class	Document Title
All	*EcoStruxure™ Foxboro™ DCS Control Network Architecture Guide* (B0700AZ)
All	*EcoStruxure™ Foxboro™ DCS Switch Configurator Application Software (SCAS) for the Control Network User's Guide* (B0700CA)
All	*I/A Series® System Media Converter Installation and Configuration Guide for Control Networks* (B0700CP)
All	*EcoStruxure™ Foxboro™ DCS Control Network Interface (CNI) User's Guide* (B0700GE)
X-Series	*EcoStruxure™ Foxboro™ DCS X440-G2 and X460-G2 Series Switches for the Control Network Installation and Configuration Guide* (B0700GV)
5520-Series	*EcoStruxure™ Foxboro™ DCS 5520-Series Switches for the Control Network Installation and Configuration Guide* (B0700HN)
All	*EcoStruxure™ Foxboro™ DCS Control Network Ethernet Equipment* (PSS 41H-7NWEQUIP)
5420/5320-Series	*EcoStruxure™ Foxboro™ DCS 5420/5320-Series Switches for the Control Network Installation and Configuration Guide* (B0700XA)
Industrial-Series	*EcoStruxure™ Foxboro™ DCS Industrial-Series Switches for the Control Network Installation and Configuration Guide* (B0700XB)

WARNING: This product can expose you to chemicals including lead and lead compounds, which are known to the State of California to cause cancer and birth defects or other reproductive harm. For more information, go to www.p65warnings.ca.gov/.

Schneider Electric Systems USA, Inc.
70 Mechanic Street
Foxboro, Massachusetts 02035–2040
United States of America

Global Customer Support: https://pasupport.se.com

As standards, specifications, and design change from time to time, please ask for confirmation of the information given in this publication.

© 2014–2025 Schneider Electric. All rights reserved.

PSS 41H-7NETWORK, Rev E