Foxboro™ DCS

Standard 200 Series I/O Subsystem Overview

Product Specification

PSS 41H-2SOV, Rev B

December 2025

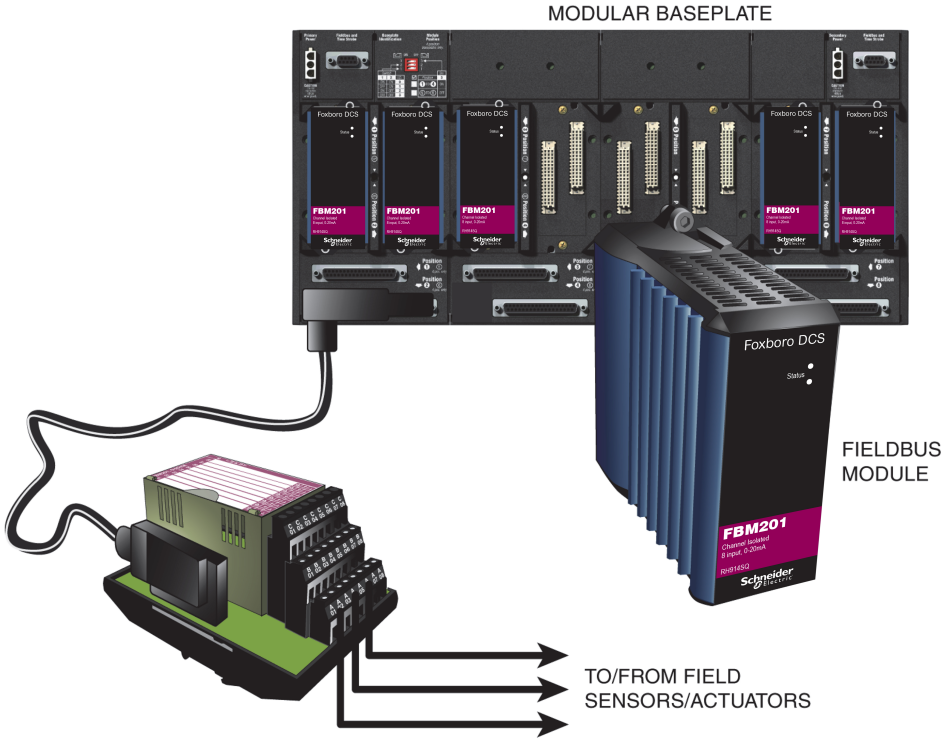

https://www.se.com

Legal Information

The information provided in this document contains general descriptions, technical characteristics and/or recommendations related to products/solutions.

This document is not intended as a substitute for a detailed study or operational and site-specific development or schematic plan. It is not to be used for determining suitability or reliability of the products/solutions for specific user applications. It is the duty of any such user to perform or have any professional expert of its choice (integrator, specifier or the like) perform the appropriate and comprehensive risk analysis, evaluation and testing of the products/solutions with respect to the relevant specific application or use thereof.

The Schneider Electric brand and any trademarks of Schneider Electric SE and its subsidiaries referred to in this document are the property of Schneider Electric SE or its subsidiaries. All other brands may be trademarks of their respective owner.

This document and its content are protected under applicable copyright laws and provided for informative use only. No part of this document may be reproduced or transmitted in any form or by any means (electronic, mechanical, photocopying, recording, or otherwise), for any purpose, without the prior written permission of Schneider Electric.

Schneider Electric does not grant any right or license for commercial use of the document or its content, except for a non-exclusive and personal license to consult it on an "as is" basis.

Schneider Electric reserves the right to make changes or updates with respect to or in the content of this document or the format thereof, at any time without notice.

To the extent permitted by applicable law, no responsibility or liability is assumed by Schneider Electric and its subsidiaries for any errors or omissions in the informational content of this document, as well as any non-intended use or misuse of the content thereof.

Overview

The standard 200 Series subsystem innovative equipment packaging, together with the integrated use of Fast Ethernet networks with fiber optic cable for communication between equipment domains, permits local or remote distribution of your process I/O points.

The standard 200 Series subsystem consists of a full line of high performance Foxboro™ DCS Fieldbus Modules (FBMs), along with the following integrally designed elements:

- Foxboro DCS Field Control Processor 280 (FCP280) – Similar in size to the FBMs, this compact control processor provides a control interface between the FBMs and the Foxboro DCS Control Network (hereinafter referred to as the control network) and allows you to locate the control processor in strategic plant areas.
- Fieldbus Communications Modules (FCMs) – Similar in size to the FBMs, these modules convert the fieldbus to expand communication up to 10 km.
- FBI200 Fieldbus Isolator/Filter - Similar in size to the FBMs, these compact, optional modules, among other functions, extend the 268 kbps Module Fieldbus between FCP280s and 100 Series FBMs up to 1830 m (6000 ft) over twinaxial cable.
- Standard Baseplates – These provide a communications backplane and a solid base for mounting the CPs, FBMs, and FCMs, allowing for a variety of remote equipment mounting configurations.
- Intrinsically Safe Baseplates (ISTA-BPs) – Compatible with standard 200 Series baseplates, the ISTA-BPs were co-developed with Pepperl and Fuchs and provide an Intrinsically Safe solution for 200 Series FBM applications.
- Enclosures – Several basic types provide various levels of environmental protection and equipment grouping for the 200 Series equipment.

The 200 Series FBMs provide full support for analog measurement, digital sensing, and analog or discrete control capabilities. The FBMs are rugged, high performance distributed process I/O modules designed for all process control tasks. Operating in conjunction with the Foxboro DCS control processors, these FBMs provide for process management and control of continuous, batch, and discrete control schemes.

Features

- Allows you to locate control processor and field input/output modules in strategic plant areas
- High performance Fieldbus Modules (FBMs)
- Enclosures to provide various levels of environmental protection
- Optional redundant power
- Variety of modular mounting configurations
- High performance, high accuracy, fast updates
- Optional Intrinsically Safe baseplates for FBMs
- Reduced component count, for ultra-high reliability and quality
- Optional redundancy
- Harsh (Class G3 - ISA S71.04) contamination protection
- Distributed local and/or remote I/O
- Power security and alarming
- Electrical isolation and field device power
- High-speed system communication

High Performance, High Accuracy, Fast Updates

The FBMs offer high resolution, high accuracy, and repeatable design. The Sigma-Delta, fast integrating analog-to-digital converter used on the analog inputs provides new readings as fast as every 25 ms, suitable for high-speed regulatory control applications. The analog inputs use a built-in configurable moving average filter that efficiently removes process electromagnetic noise.

Optional Redundancy

The standard 200 Series subsystem is optionally available with total redundancy, for high reliability and availability. Redundancy is available for the:

- Power supplies
- Control network
- FCMs
- CPs
- Modular Fieldbus cables between baseplates
- Certain FBM I/O module types

Rugged, Innovative Packaging

The standard 200 Series FBMs are packaged as structurally identical plug-in modular assemblies. To permit mounting in harsh environments, each module has a rugged, extruded aluminum exterior, without open vent holes, for physical protection of the circuits. Heat generated within the module is conducted from the module via the aluminum finned cover. This approach to protection helps prevent contaminants in the plant environment from reaching the control components, greatly extending the life of

the equipment. The operating temperature for a module is rated at either 50°C, 60°C, or 70°C depending on the module and termination assembly type. The specific Product Specification Sheet (see Standard 200 Series Fieldbus Modules, page 15) for each module lists the specific operating temperature for the module.

Electrical Certifications

The Standard 200 Series subsystem has the following product safety certifications:

- Underwriters Laboratories (UL) listing for both US (NRTL) and Canadian (UL-C) requirements for both ordinary and hazardous locations
- ATEX (DEMKO) certification for use in potentially explosive atmospheres
- CE approved

As well, the Standard 200 Series subsystem is Marine Certified. See *Standard and Compact 200 Series I/O Marine Certifications* (PSS 41H-MARCERT) for details.

For additional information about certifications, see *Standard and Compact 200 Series I/O - Agency Certification* (PSS 41H-2CERTS).

Light-emitting diodes (LEDs) incorporated into the front of each module provide visual status indications of the FBM functions.

The small size of these FBMs allows ample room in an enclosure to terminate field wiring near the FBM.

200 Series Baseplate Mounting

The 200 Series Fieldbus Modules mount on 200 Series baseplates which have been specially designed to support them (see Figure 1, page 7, only vertical baseplates shown - also FBMs do not mount on the FCM-only or FBI-only baseplates).

The baseplates shown in Figure 1, page 7 fasten to a structurally supported non isolated DIN rail for mounting inside or outside an enclosure. (As an alternative to DIN rail mounting, a mounting plate can be used for horizontal mounting of the 200 Series baseplate on a 19-inch rack.) These baseplates can thus be mounted in small, distributed cabinets or in a variety of other mounting configurations.

The baseplates are backwards compatible with existing I/O subsystems allowing for future expansion without additional interface hardware and includes the following:

- Primary and secondary 24 V dc power connections
- Two Module Fieldbus connections (for A/B Module Fieldbus daisy chain)
- Power/communication connection and field I/O connection for each FBM
- DIP switch for baseplate identification
- A/B Module Fieldbus and optional time strobe splitter/terminator connection
- Adding additional baseplates without removing the system from service (requires redundant Module Fieldbus)

The baseplates that support FBMs provide increased overall system installation functionality by providing unit increments of 2, 4, and 8 module positions with additional operational functionality in combination with vertical and horizontal mounting.

Any FBM (except FBM232/233) can be removed from a FBM-supporting baseplate without removing or disturbing external field device wire terminations or internal cable terminations or connections.

FCPs and FCMs require removal of wiring to the control network.

Shielded twisted-pair cables for baseplate interconnections are available in various lengths of 0.25 m (10 in) up to 60 m (198 ft). The maximum twisted-pair cable length interconnecting all baseplates is 60 m (198 ft).

Figure 1, page 7 shows selected vertical DIN rail mounted baseplates. Horizontal DIN rail mounted baseplates are available in similar styles as the vertical mounted baseplates, but equivalents for each style are not all available. See *Standard 200 Series Baseplates* (PSS 41H-2SBASPLT) and *Compact 200 Series 16-Slot Horizontal Baseplate* (PSS 41H-2C200) for additional information on the remaining Standard and Compact 200 Series baseplates.

Figure 1 - Vertically Mounted Standard 200 Series Baseplates (Selected Models)

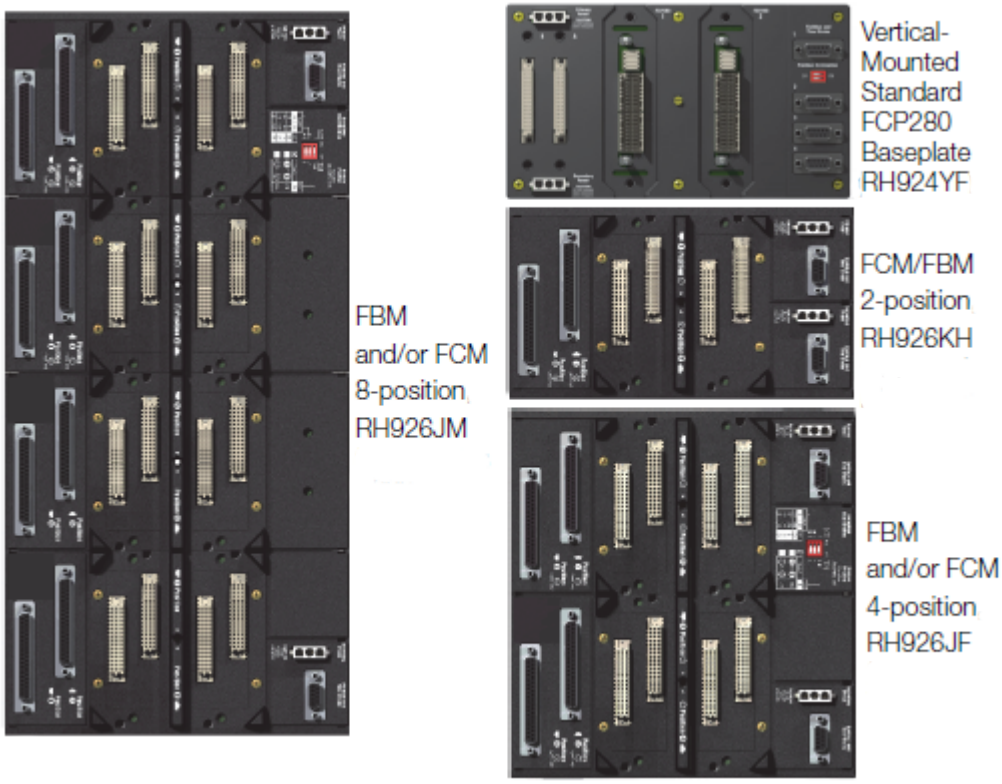

Field I/O Terminations

Field I/O signal connections are made at termination assemblies (TAs) mounted on DIN rails within or external to the enclosure. TAs are connected to the associated baseplate by dedicated cables, which can be 0.5 m (1.7 ft) up to 30 m (100 ft) in length. These various cable lengths allow the TAs to be mounted in the same enclosure as the FBMs, or in an adjacent enclosure.

Analog and discrete I/O FBMs are used with specific TAs to handle a variety of input/output signals. When used in high voltage applications, discrete I/O TAs adapt the module to 120 V ac, 125 V dc, or 240 V ac inputs. TAs with built-in relays are available for switching high voltage and high current digital outputs. Some TAs read back the state of the contacts to confirm the state of the relay.

Intrinsically Safe Termination Assembly - Baseplate (ISTA-*BP*)

The ISTA-*BP* is a combination of a baseplate with integrated terminals fitted with one or two FBMs and eight galvanic isolators. This solution consists of a printed circuit board and therefore does not require any additional wiring on the board, offering an interface between the control processor and field I/O sensors and actuators. As a result this compact packaging offers a noticeable space saving in the interface cabinet. This is a joint Foxboro / Pepperl+Fuchs product. For details, see *Intrinsically-Safe Termination Assemblies and Baseplates (ISTA*BP*)* (PSS 31H-2Y12).

Enclosures

Enclosures extend the design of the 200 Series FBMs by providing a range of mounting options to match application requirements.

The G-Series enclosures are floor-standing units which accommodate baseplates for mounting FBMs, FCP280s, and/or termination assemblies or terminal blocks for marshalling. The G-Series enclosures that support 200 Series I/O subsystem equipment are available for use in ordinary (IP 43/54) rated environments.

Several product lines of metal enclosures are offered with the 200 Series I/O subsystem:

- G-Series 800x800 Front and Rear Access Enclosures
- G-Series 800x800 Front and Rear Access Enclosures (G11 termination enclosure)

Each of the enclosures includes DIN rails for mounting equipment, power supplies, and terminal blocks for connection of line power, utility power, and dc power distribution. For additional information regarding each enclosure, see *G-Series Enclosures Overview* Product Specification (PSS 41H-2GOV).

Communication

Communication between redundant control networks is routed via the redundant Fieldbus Communications Modules or the FCP280 to the FBMs. The control network is a redundant serial data communication bus that employs asynchronous protocol and conforms to the general requirements of Ethernet communication with a fiber optic interface. The standard 200 Series subsystem uses a request-response polling technique, helping ensure that the control network is busy only in response to a request. The control network provides protection against single-bit, double-bit, odd-bit number, and burst errors. The Module Fieldbus is resistant to FBM complications to the extent that no single complication in any one module can cause both segments of the redundant Module Fieldbus to become inoperable.

Distributed Local/Remote Mounting

Innovative design of the equipment packaging allows the 200 Series FBMs to be distributed closer to the process without special environmentally conditioned control or equipment rooms. Multiple control network configurations can be designed using the Ethernet fiber optic cables and switches. This allows construction of small-to-large size systems located within one or more mounting areas.

Figure 3, page 11 shows basic network configurations that can be implemented for the standard 200 Series subsystem. Both of these configurations offer connection to an Ethernet switch(es), allowing the FBMs to be remotely mounted with the FCP280.

The Field Control Processor configuration (Figure 3, page 11) can be used where groupings of FBMs are concentrated in a more localized area, or where groupings of FBMs are located in the same enclosure or 200 Series baseplate as the FCP280. This control network configuration thus allows distribution of the FBMs over a wide area.

The FBI200 is used with FCP280 to extend the distance of a 2 Mbps or 268 Kbps HDLC fieldbus. It is not required for filtering and isolation with the FCP280.

Figure 2 - Standard 200 Series Subsystem, Typical FCP280 Configuration (Conceptual)

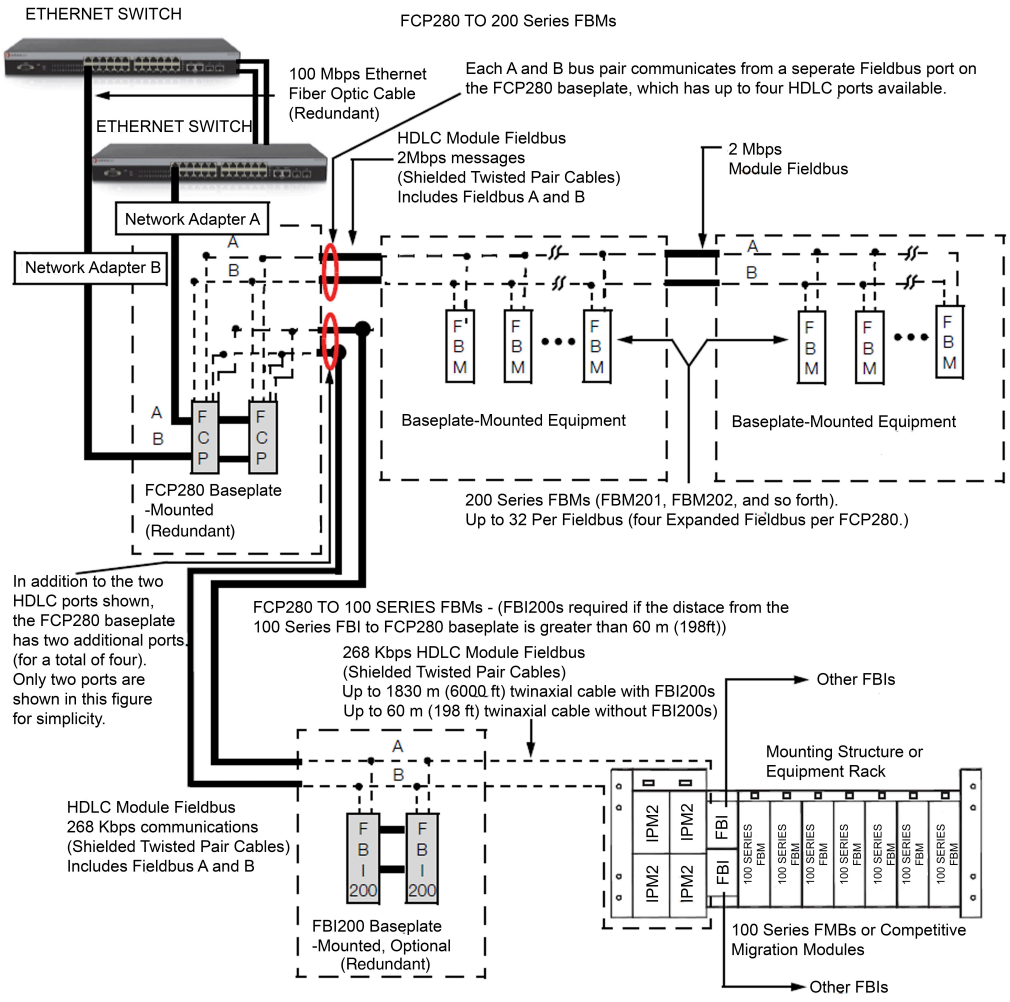

For sizing constraints and devices supported, see *FBI200 Fieldbus Isolator/Filter* (PSS 31H-2Y18). Without FBI200s, the maximum distance to 100 Series FBMs is 60 m (195 ft) in this configuration. The FCP280 communicates with 200 Series FBMs and 100 Series FBMs or competitive migration modules via separate fieldbus ports (dual baud functionality), as described in *Field Control Processor 280* (PSS 41H-1FCP280).

FCM2F Fieldbus Communications modules (see Figure 4, page 12) provide baseplate-to-baseplate fiber optic extension of the Module Fieldbus. This allows 200 Series FBMs to be locally, or remotely distributed in multiple enclosures for strategic placement of input/output points.

The three versions of the FCM2Fs – FCM2F2, FCM2F4, and FCM2F10 – offer three different maximum baseplate-to-baseplate fiber optic cabling distances: up to 2 km (1.24 mi), up to 4 km (2.48 mi), and up to 10 km (6.2 mi), respectively. FCM2F2 and FCM2F4 are used with multimode graded-index fiber cable, and FCM2F10 is used with single-mode fiber cable.

The FCM2Fs are mounted on the baseplates in pairs for redundancy, one each for the “A” and “B” cables of the Fieldbus. Non-redundant configurations require only a single FCM2F.

Figure 3 - 200 Series Baseplate Interconnection Using Fiber Optic Cable

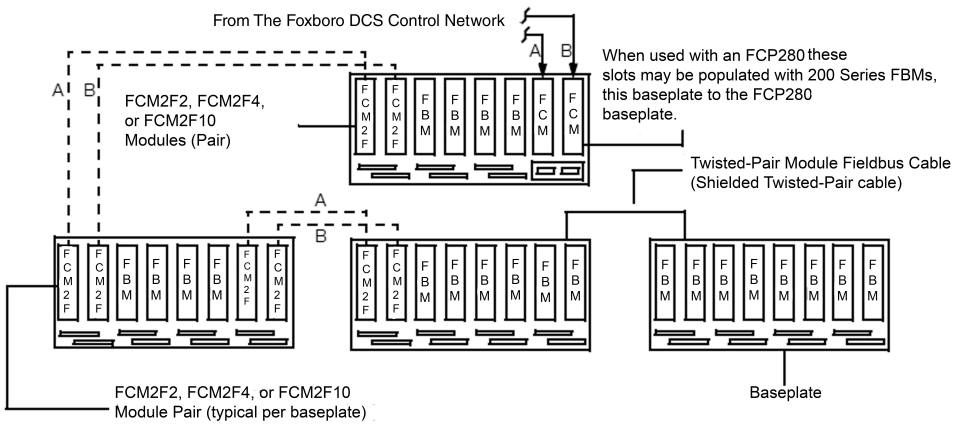

Redundant configuration is shown. Non-redundant configuration uses one FCM2F per baseplate, connected to either Fieldbus “A” or “B”. Up to two pairs of FCM2Fs are allowed in series. Two FCM2F10s allow up to 20 km (12.4 mi) total distance for the Fieldbus. The number of FCM100 E/Ets are not included when determining how many FCM2Fs are permissible in the baseplate chain. Three versions of the FCM2F provide three different fiber optic cabling distances:

- FCM2F2 = 2 km (1.24 mi)
- FCM2F4 = 4 km (2.48 mi)
- FCM2F10 = 10 km (6.2 mi)

200 Series Baseplate Implementation

200 Series baseplate mounting of the FBMs and associated FCMs provides added versatility in application of the 200 Series equipment. The 200 Series baseplates, which provide for convenient physical grouping of the CPs and FBMs are interconnected by coaxial cable. Figure 5, page 13 shows basic baseplate configuration using shielded twisted-pair connections. Optional redundant cables for the Module Fieldbus can be used by connecting the cables to A/B Module Fieldbus splitter/terminators.

Figure 5, page 13 shows a basic baseplate configuration using shielded twisted-pair connections. This configuration is used when the 200 Series baseplates are mounted within an enclosure or enclosures in the same location (for example, in multiple enclosures in the same area). Shielded twisted-pair cables (for interconnecting the 200 Series baseplates) are available in lengths of 0.25 to 60 meters.

Figure 4 - 200 Series Baseplate Implementation Example

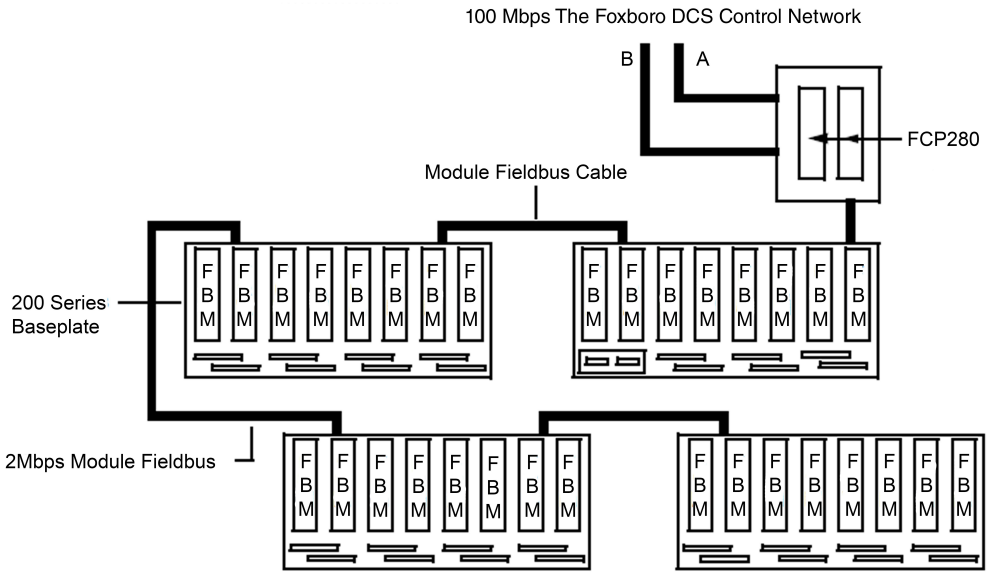

The maximum FBM quantity is listed in Functional Specifications, page 26. The maximum total cable run of all 2 Mbps Module (HDLC) Fieldbus is 60 m (198 ft), including any cabling to FBI200, if present. Up to four of these baseplate chains can be connected to the FCP280 baseplate.

Power Security

Power Distribution

Grounding practices for all enclosures and the subsystem meet the grounding practices and requirements of:

- IEC 61000-5-1 General Considerations
- IEC 61000-5-2 Grounding and Cabling

The 24 V dc power supplies (FPS480-24, FPS400-24, FPS240-24 and FPS120-24) are agency certified for use in Class I, Division 2 applications.

For each 200 Series FBM enclosure, you can select single or redundant power distribution. A single power distribution configuration consists of a single power supply and single power distribution to the 200 Series baseplates.

A redundant power distribution configuration consists of redundant power supplies and redundant power distribution to the baseplates. This provides power security on power module failure for process loops where continued operation is necessary. The dual power feed distribution network helps protect against any single-point power failures, and helps protect all modules against power main failures and internal short circuits.

Module software is downloaded to and retained in flash memory by the FCP280 for faster reboot after power outages.

Power Alarming

Failure of a single or redundant 24 V dc power supply is detected by each module in a 200 Series baseplate(s). If the power supply fails, the following occurs:

- The color of the module's icon on the equipment displays in Foxboro DCS System Manager or SMDH is changed
- Power status messages are displayed on the System Monitor display
- A system message is printed

Since the host loses communication with the module(s), the color of the host module's icon in System Manager or SMDH is changed. The above occurs for the following failures:

- A single power supply system
- A single power supply in a redundant system, if configured for alarming
- Both power supplies in a redundant system

Electrical Isolation and Field Device Power

Electrical isolation and field device power are functions of the individual FBM types. The various FBM types provide, on an individual basis, channel isolated analog inputs and outputs, differential analog inputs, channel isolated digital inputs and outputs, and group isolated digital inputs. The FBMs also provide the necessary field device power for analog transmitters, current to pressure (I/P) converters, contact sensing, and solid state switch or relay drive.

The three levels of isolation available with specific FBMs are:

- Channel Isolated – Each channel is galvanically isolated from all other channels, earth (ground) and module logic. Isolated inputs and outputs use a per point isolated power supply, built into the FBM, for each channel.
- Differential Isolated – Each channel has a differential input to allow voltage differences between channels without introducing issues. The channels are not galvanically isolated from each other, but are galvanically isolated from earth (ground) and module logic. Differential group isolated inputs and outputs use the FBM subsystem power supply for field power.
- Group Isolated – Input channels are isolated as a group from earth (ground) and module logic circuitry. Group isolated inputs use the subsystem power supply for field circuit power. For certain FBMs with group isolation, specific TAs provide channel isolation to the FBMs' inputs.

Standard 200 Series Fieldbus Modules

Each FBM is configurable for operation with the applicable field sensors and/or actuators. This is accomplished by executing appropriate application programs, and in conjunction with configurable program options. The standard 200 Series FBMs and their executable programs and software functions are identified in Table 1, page 16. Also listed are the Product Specification Sheets (PSSs) for the individual FBMs.

Table 1 - Standard 200 Series Fieldbus Modules

Module	Function(s)	Application Program	Software Function(s)[a]	PSS Number
FBM201	8-Channel 0 to 20 mA Input, Channel Isolated	Analog Input	Conversion Time, Rate of Change Limits	PSS 41H-2Z1
FBM201b	8-Channel 0 to 100 mV dc Input, Channel Isolated	Analog Input	Conversion Time, Rate of Change Limits	PSS 41H-2Z1
FBM201c	8-Channel 0 to 5 V dc Input, Channel Isolated	Analog Input	Conversion Time, Rate of Change Limits	PSS 41H-2Z1
FBM201d	8-Channel 0 to 10 V dc Input, Channel Isolated	Analog Input	Conversion Time, Rate of Change Limits	PSS 41H-2Z1
FBM202	8-Channel Thermocouple/ Millivolt Input, Channel Isolated	Analog Input	Conversion Time, Rate of Change Limits	PSS 41H-2Z2
FBM203	8-Channel RTD Input (platinum or nickel), Channel Isolated, 0 to 320 ohm	Analog Input	Conversion Time, Rate of Change Limits	PSS 41H-2Z3
FBM203b	8-Channel RTD Input (platinum or nickel), Channel Isolated, 0 to 640 ohm	Analog Input	Conversion Time, Rate of Change Limits	PSS 41H-2Z3
FBM203c	8-Channel RTD Input (copper), Channel Isolated, 0 to 30 ohm	Analog Input	Conversion Time, Rate of Change Limits	PSS 41H-2Z3
FBM203d	8-Channel 4-wire RTD Input (Pt, Ni, Cu), Channel Isolated, 0 to 320 ohm	Analog Input	Conversion Time, Rate of Change Limits	PSS 41H-2Z3
FBM204	8-Channel 0 to 20 mA I/O (4 Input, 4 Output), Channel Isolated	Analog I/O or DPIDA	Conversion Time, Output Fail-Safe Configuration (Hold/Fall-back on a per channel basis)	PSS 41H-2Z4
FBM205	Redundant 0 to 20 mA Input/Output (4 Input and 4 Output), Channel Isolated	Analog I/O	Conversion Time, Output Fail-Safe Configuration (Fall-back to "0" on a per channel basis)	PSS 41H-2Z5
FBM206	8-Channel Pulse Input, Channel Isolated	Pulse Input	Pulse Rate Input Totalization and Resolution, Meter Scaling Factor	PSS 41H-2Z6
FBM206b[b]	4-Channel Pulse Input,4-Channel 0 to 20 mA Output, Channel Isolated	Pulse Input and Analog Output	(Input) Pulse Rate Input Totalization and Resolution, Meter Scaling Factor (Output) Output Fail-Safe Configuration	PSS 41H-2Z6
FBM207	Redundant Ready6-Channel Voltage Monitoring, Channel Isolated	Discrete Input or Ladder Logic	Input Filter Time	PSS 41H-2Z7

Table 1 - Standard 200 Series Fieldbus Modules (Continued)

Module	Function(s)	Application Program	Software Function(s)[a]	PSS Number
FBM207b	Redundant Ready16-Channel 24 V dc Contact Sense, Channel Isolated	Discrete Input or Ladder Logic	Input Filter Time	PSS 41H-2Z7
FBM207c	Redundant Ready16-Channel 48 V dc Contact Sense, Channel Isolated	Discrete Input or Ladder Logic	Input Filter Time	PSS 41H-2Z7
FBM208	Redundant with Readback, 0 to 20 mA Input/Output (4 Input and 4 Output), Channel Isolated	Analog I/O	Conversion Time, Output Fail-Safe Configuration (Fall-back to "0" on a per channel basis)	PSS 41H-2Z8
FBM208b	Redundant with Readback, 0 to 20 mA Input/Output (4 Input and 4 Output), Channel Isolated	Analog I/O	Conversion Time, Output Fail-Safe Configuration (Fall-back to "0" on a per channel basis)	PSS 41H-2Z8
FBM211	16-Channel Differential Analog Input,0 to 20 mA, Differential Isolated	Analog Input	Conversion Time, Rate of Change Limits	PSS 41H-2Z11
FBM212	14-Channel Differential Analog Input, Thermocouple, Differential Isolated	Analog Input	Conversion Time, Rate of Change Limits	PSS 41H-2Z12
FBM214	8-Channel 0 to 20 mA, HART® Input	Analog Input and HART Input	Rate of Change Limits	PSS 41H-2Z14
FBM214b	8-Channel 0 to 20 mA, HART® Input,Channel-Isolated,	Analog Input and HART Input	Conversion Time, Rate of Change Limits	PSS 41H-2Z14
FBM215	8-Channel 0 to 20 mA, HART Output	Analog Output and HART Output	Output Fail-Safe Configuration (Hold/Fall-back on a per channel basis)	PSS 41H-2Z15
FBM216	Redundant 8-Channel 0 to 20 mA, HART Input	Analog Input and HART Input	Rate of Change Limits	PSS 41H-2Z16
FBM216b	Redundant 8-Channel 0 to 20 mA, HART InputChannel-Isolated,	Analog Input and HART Input	Conversion Time, Rate of Change Limits	PSS 41H-2Z16
FBM217	Redundant Ready 32-Channel Discrete Input, Group Isolated[c]	Discrete I/O, or Ladder Logic	Input Filter Time	PSS 41H-2Z17
FBM218	Redundant 8-Channel 0 to 20 mA, HART Output	Analog Output and HART Output	Output Fail-Safe Configuration (When Non-Redundant, Hold/ Fallback on a per channel basis; When Redundant, Fallback to "0" on a per channel basis)	PSS 41H-2Z18

Table 1 - Standard 200 Series Fieldbus Modules (Continued)

Module	Function(s)	Application Program	Software Function(s)[a]	PSS Number
FBM219	24-Channel Voltage Monitor, Plus 8-Channel Discrete Output, External Source, Group Isolated[d]	Discrete I/O or Ladder Logic	Input Filter Time, Fail-Safe Configuration, Fail-Safe Fall-back, and Sustained or Momentary Outputs. If the Momentary Output configuration is selected, then Pulse Output Interval is also configurable.	PSS 41H-2Z19
FBM220	1-Channel Interface to H1 Foundation™ fieldbus	Intelligent Device Interface	Input/output engineering units, device tag information and automatic Link Active Scheduling (LAS)	PSS 21H-2Z20 B4
FBM221	4-Channel Interface to H1 Foundation fieldbus	Intelligent Device Interface	Input/output engineering units, device tag information and automatic Link Active Scheduling (LAS)	PSS 21H-2Z20 B4
FBM222	Redundant Ready2-Channel Interface to Redundant PROFIBUS-DP™	Field Network Interface	PROFIBUS-DP Master and Slave	PSS 41H-2Z22
FBM223	2-Channel Interface to PROFIBUS-DP™	Field Network Interface	PROFIBUS-DP Master	PSS 21H-2Z23 B4
FBM224	4-Port RS-232, RS-422 and/or RS-485 Interface to Modbus® Devices	Field Network Interface	Modbus Master	PSS 31H-2Z24
FBM227	4-Channel 0 to 10 V dc Input,2-Channel 0 to 10 V dc Output4-Channel Discrete Input,4-Channel Discrete Output; Discrete channels are isolated in channel pairs	Analog I/O, Discrete I/O, (Both) MDACT or DPIDA Control Support	(Analog) Conversion Time, Output Fail-Safe Configuration, (Discrete) Input Filter Time	PSS 41H-2Z27
FBM228	Redundant Ready 4-Channel Interface to H1 Foundation fieldbus	Intelligent Device Interface	Input/output engineering units, device tag information and automatic Link Active Scheduling (LAS); optionally redundant	PSS 41H-2Z28
FBM229	1-Channel Interface to DeviceNet Devices	Intelligent Device Interface	Master/scanner node on the DeviceNet bus, supporting all I/O modes - polled, cyclic, bit strobe and change-of-state	PSS 41H-2Z29
FBM230	RS-232, RS-422 and/or RS-485 Interface	Field Network Interface	Field Device System Integrator, protocol configurable by loading specific software driver	PSS 41H-2Z30

Table 1 - Standard 200 Series Fieldbus Modules (Continued)

Module	Function(s)	Application Program	Software Function(s)[a]	PSS Number
FBM231	Redundant RS-232,RS-422 and/or RS-48	Field Network Interface	Field Device System Integrator, protocol configurable by loading specific software driver	PSS 41H-2Z31
FBM232	Ethernet Interface	Field Network Interface	Field Device System Integrator, protocol configurable by loading specific software driver	PSS 41H-2Z32
FBM233	Redundant Ethernet Interface	Field Network Interface	Field Device System Integrator, protocol configurable by loading specific software driver	PSS 41H-2Z33
FBM237	Redundant Ready8-Channel 0 to 20 mA Output, Redundant, Channel Isolated	Analog Output	Output Fail-Safe Configuration (When Non-Redundant, Hold/Fallback on a per channel basis; When Redundant, Fallback to "0" on a per channel basis)	PSS 31H-2Z37
FBM238	24-Channel Voltage Monitor, Plus8-Channel Discrete Output, External Source, Group Isolated	Discrete I/O or Ladder Logic	Input Filter Time	PSS 41H-2Z38
FBM239	16-Channel Voltage Monitor, Plus16-Channel Discrete Output, External Source, Group Isolated	Discrete I/O or Ladder Logic	Input Filter Time	PSS 41H-2Z39
FBM240	Redundant Ready8-Channel Externally Sourced Discrete Output with Readback, Channel Isolated	Discrete Output	Output Fail-Safe Configuration (When Redundant, Fallback to "0" on a per channel basis)	PSS 41H-2Z40
FBM241	8-Channel Voltage Monitor, Plus8-Channel Discrete Output, External Source, Channel Isolated	Discrete I/O or Ladder Logic	Input Filter Time, Fail-Safe Configuration, Fail-Safe Fall-back, and Sustained or Momentary Outputs. If the Momentary Output configuration is selected, then Pulse Output Interval is also configurable.	PSS 41H-2Z41
FBM241b	8-Channel Voltage Monitor, Plus8-Channel Discrete Output, Internal Source, Channel Isolated	Discrete I/O or Ladder Logic	Input Filter Time, Fail-Safe Configuration, Fail-Safe Fall-back, and Sustained or Momentary Outputs. If the Momentary Output configuration is selected, then Pulse Output Interval is also configurable.	PSS 41H-2Z41

Table 1 - Standard 200 Series Fieldbus Modules (Continued)

Module	Function(s)	Application Program	Software Function(s)[a]	PSS Number
FBM241c	8-Channel Contact Sense, Plus8-Channel Discrete Output, External Source, Channel Isolated	Discrete I/O or Ladder Logic	Input Filter Time, Fail-Safe Configuration, Fail-Safe Fall-back, and Sustained or Momentary Outputs. If the Momentary Output configuration is selected, then Pulse Output Interval is also configurable.	PSS 41H-2Z41
FBM241d	8-Channel Contact Sense, Plus8-Channel Discrete Output, Internal Source, Channel Isolated	Discrete I/O or Ladder Logic	Input Filter Time, Fail-Safe Configuration, Fail-Safe Fall-back, and Sustained or Momentary Outputs. If the Momentary Output configuration is selected, then Pulse Output Interval is also configurable.	PSS 41H-2Z41
FBM242	16-Channel Externally Sourced Discrete Output, Channel Isolated	Discrete Output or Ladder Logic	Fail-Safe Configuration	PSS 41H-2Z42
FBM243	8-Channel Bi-directional FoxCom™ Dual Baud Rate Intelligent Device Interface Communication	Intelligent Device Interface	Output in Engineering Units, Fail-Safe information, Tag Number name and location, Device name (letterbug), last calibration date; two levels of upload/ download capabilities	PSS 41H-2Z43
FBM243b	4-Channel Bi-directional FoxCom™ Dual Baud Rate Intelligent Device Interface Communication, Plus4-Channel 0 to 20 mA, Output	Intelligent Device Interface and Analog Output	Output in Engineering Units, Fail-Safe information, Tag Number name and location, Device name (letterbug), last calibration date; two levels of upload/ download capabilities and Output Fail-Safe Configuration	PSS 41H-2Z43
FBM244	4-Channel 0 to 20 mA Input and 4-Channel 0 to 20 mA Output (with HART® Support on All Channels)	Analog I/O and HART I/O	(Input) Conversion Time, Rate of Change Limits, (Output) Output Fail-Safe Configuration	PSS 41H-2Z44
FBM245	Redundant 4-Channel 0 to 20 mA Input and 4-Channel 0 to 20 mA Output (with HART® Support on All Channels)	Analog I/O and HART I/O	(Input) Conversion Time, Rate of Change Limits, (Output) Output Fail-Safe Configuration	PSS 41H-2Z45

Table 1 - Standard 200 Series Fieldbus Modules (Continued)

Module	Function(s)	Application Program	Software Function(s)[a]	PSS Number
FBM246	Redundant, 8-Channel Bi-directional FoxCom Dual Baud Rate Intelligent Device Interface Communication	Intelligent Device Interface	Output in Engineering Units, Fail-Safe information, Tag Number name and location, Device name (letterbug), last calibration date; two levels of upload/ download capabilities	PSS 31H-2Z46
FBM246b	Redundant, 4-Channel Bi-directional FoxCom Dual Baud Rate Intelligent Device Interface Communication, Plus4-Channel 0 to 20 mA, Output	Intelligent Device Interface and Analog Output	Output in Engineering Units, Fail-Safe information, Tag Number name and location, Device name (letterbug), last calibration date; two levels of upload/ download capabilities and Output Fail-Safe Configuration	PSS 31H-2Z46
FBM247	8-Channel Current/ Voltage Analog/Digital/ Pulse I/O Configurable Channel Interface Module (with HART® Support on All Channels) - Includes support for additional communication types	Analog I/O and Discrete I/O	Discrete Input, Pulse Count, Sequence of Events and Transient Data Recording with support for Sustained and Momentary Digital Outputs	PSS 41H-2Z47
FBM248	Redundant 8-Channel Current/Voltage Analog/ Digital/Pulse I/O Configurable Channel Interface Module (with HART® Support on All Channels) - Includes support for additional communication types	Analog I/O and Discrete I/O	Discrete Input, Pulse Count, Sequence of Events and Transient Data Recording with support for Sustained and Momentary Digital Outputs	PSS 41H-2Z48

(a) Software functions for inputs are exercised on a per module basis; those for outputs are exercised on a per channel basis.

(b) FBM208b is for use in conversion mounting structures only with a Termination Assembly Adapter (TAA), discussed in *Termination Assembly Adapter Modules for 100 Series Upgrade* (PSS 41H-2W4). FBM208b cannot be used in standard 200 Series baseplates with a FBM208 redundancy adapter and termination assembly.

(c) The TA for this FBM provides channel isolation for the FBM's inputs as well. Details are provided in the FBM's PSS.

(d) The TAs for this FBM provides channel isolation for either the FBM's inputs or outputs as well. Details are provided in the FBM's PSS.

Fieldbus Communications Modules

Fieldbus Communications Modules used in conjunction with the 200 Series FBMs are listed in Table 2, page 25.

Redundant Fieldbus Modules

Redundant FBMs must be installed in pairs along with a redundancy adapter. These include FBM205, FBM208, FBM216, FBM218, FBM231, FBM233, FBM245, FBM246 and FBM246b. Two single modules are combined at the associated baseplate with the field signals wired to one common termination assembly. Redundant control blocks interface to the inputs and/or outputs. A pair of FBM208b modules must only be installed in a 100 Series Migration mounting structure along with two TAAs and the original FBM05 termination assembly and cabling. Each redundant FBM independently attempts to hold the output(s) at its specified output value(s), and each independently reports its observed value of the inputs.

Redundant Ready Fieldbus Modules

Redundant ready FBMs may be used in either non-redundant mode by installing a single module or in redundant mode by installing two modules along with a redundancy adapter. These include FBM207, FBM207b, FBM207c, FBM217, FBM222, FBM228, FBM237 and FBM240. In either configuration, the modules are identical. In the redundant configuration, two single modules are combined at the associated FBM-supporting baseplate, with the field output signals wired to one common termination assembly. Redundant control blocks interface to the inputs and/or outputs. Each redundant Fieldbus Module independently attempts to hold the output(s) at its specified output value(s), and each independently reports its observed value of the inputs.

Calibration

The analog FBMs are calibrated at the factory prior to shipment and cannot be calibrated in the field. In addition, discrete input/output FBMs do not need field adjustments. Therefore, the FBMs do not contain local (that is, module-mounted) manual controls or jumpers.

Table 2 - Fieldbus Communications Modules

Module Type	Function	PSS
FCM2F	Available in three models: FCM2F2, FCM2F4, and FCM2F10 (for 2, 4, and 10 km cabling, respectively). Used to extend the Module Fieldbus, allowing greater distance between 200 Series baseplates (used in pairs for redundancy).	PSS 41H-2FCM

Functional Specifications

Software Requirements	• FCP280: Foxboro DCS Control Core Services software Version 9.0 or higher • FBM229 or FBM247: I/A Series Version 8.7 to 8.8 or Foxboro DCS Control Core Services software V9.0 or higher • FBM248: Control Core Services software V9.3 or higher
Compatible Foxboro DCS Control Processor	Control Processor FCP280, FCP270 or ZCP270
Equipment Quantities	• FBMs hosted by FCP280[a]: 100 Series FBMs - 64 maximum 200 Series FBMs - 128 maximum (when used exclusively with 200 Series FBMs) or 96 maximum (when used with a mix of 100 Series and 200 Series FBMs) • FBMs hosted by FCP270[b]: 100 Series FBMs - 64 maximum 200 Series FBMs - 32 maximum (without FEM) or 128 maximum (with FEM) • FBMs hosted by ZCP270[c]: Up to 128 100 Series or 200 Series FBMs per ZCP270 with FCM100E (dependent upon the number of FCM100Es implemented) • FCM100Et pairs per ZCP270: 32 maximum • FBMs hosted by FCM100Et[c] 32 maximum • FBMs hosted by FCM100E[c]

(a) Depending on control processor sizing constraints [See *Field Control Processor 280 (FCP280) Sizing Guidelines and Excel Workbook* (B0700FY).]

(b) Depending on control processor sizing constraints [See *Field Control Processor 270 (FCP270) Sizing Guidelines and Excel Workbook* (B0700AV).]

(c) Depending on control processor sizing constraints [See *Z-Module Control Processor 270 (ZCP270) Sizing Guidelines and Excel Workbook* (B0700AW).]

Related Documents

For reference purposes, this table lists the documents for additional hardware and software elements in the standard 200 Series subsystem. (PSSs for the FBMs and FCMs are listed in Table 1, page 16 and Table 2, page 25.)

Document Number	Description
PSS 41H-2W100	100 Series Fieldbus Module Upgrade Subsystem Overview
PSS 41H-2CERTS	Standard and Compact 200 Series I/O — Agency Certification
PSS 41H-MARCERT	Standard and Compact 200 Series I/O — Marine Certifications
PSS 41H-2W3	Standard 200 Series Power Supply — FPS400-24
PSS 41H-2SBASPLT	Standard 200 Series Baseplates
PSS 41H-2C200	Compact 200 Series 16-Slot Horizontal Baseplate
PSS 41H-2FPS	Standard 200 Series Power Supplies — FPS240-24 and FPS120-24
PSS 41H-2C480	Compact Power Supply — FPS480-24
PSS 31H-2Y12	Intrinsically-Safe Termination Assemblies and Baseplates (ISTA*BP*)
PSS 21H-2Y18	FBI200 Fieldbus Isolator/Filter
PSS 21H-2X1 B3	DIN Rail Mounted FBM Enclosures, Overview - (for legacy Enclosures)
PSS 41H-1FCP280	Field Control Processor 280 (FCP280)
B0400FA	Standard and Compact 200 Series Subsystem User's Guide

Proposition 65

WARNING: This product can expose you to chemicals including lead and lead compounds, which are known to the State of California to cause cancer and birth defects or other reproductive harm. For more information go to www.P65Warnings.ca.gov.

Schneider Electric Systems USA, Inc.
70 Mechanic Street
Foxboro, Massachusetts 02035–2040
United States of America

Global Customer Support: https://pasupport.se.com

As standards, specifications, and design change from time to time, please ask for confirmation of the information given in this publication.

© 2019–2025 Schneider Electric. All rights reserved.

PSS 41H-2SOV, Rev B