Foxboro™ DCS

Standard 200 Series Baseplates

PSS 41H-2SBASPLT

Product Specification

May 2025

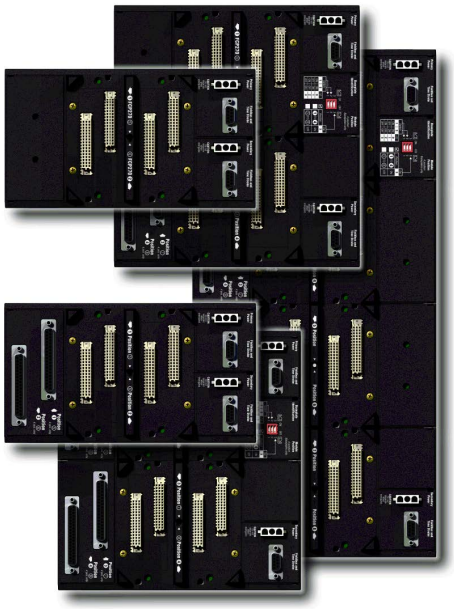

Legal Information

The information provided in this document contains general descriptions, technical characteristics and/or recommendations related to products/solutions.

This document is not intended as a substitute for a detailed study or operational and site-specific development or schematic plan. It is not to be used for determining suitability or reliability of the products/solutions for specific user applications. It is the duty of any such user to perform or have any professional expert of its choice (integrator, specifier or the like) perform the appropriate and comprehensive risk analysis, evaluation and testing of the products/solutions with respect to the relevant specific application or use thereof.

The Schneider Electric brand and any trademarks of Schneider Electric SE and its subsidiaries referred to in this document are the property of Schneider Electric SE or its subsidiaries. All other brands may be trademarks of their respective owner.

This document and its content are protected under applicable copyright laws and provided for informative use only. No part of this document may be reproduced or transmitted in any form or by any means (electronic, mechanical, photocopying, recording, or otherwise), for any purpose, without the prior written permission of Schneider Electric.

Schneider Electric does not grant any right or license for commercial use of the document or its content, except for a non-exclusive and personal license to consult it on an "as is" basis.

Schneider Electric reserves the right to make changes or updates with respect to or in the content of this document or the format thereof, at any time without notice.

To the extent permitted by applicable law, no responsibility or liability is assumed by Schneider Electric and its subsidiaries for any errors or omissions in the informational content of this document, as well as any non-intended use or misuse of the content thereof.

Overview

The Standard 200 Series baseplates provide the mounting platform and communication backplane for DIN rail mounted 200 Series modules.

These standard 200 Series baseplates support distributed control for both small and large systems and specifically support the following Foxboro™ DCS modules:

- Field Control Processor 280 (FCP280) fault-tolerant or non-fault-tolerant
- Field Device Controller 280 (FDC280) fault-tolerant or non-fault-tolerant
- Fieldbus Communication Modules (FCM2F2, FCM2F4, and FCM2F10)
- Fieldbus Isolator/Filter Modules (FBI200/FBI100)
- Standard Fieldbus Modules (FBMs) and 100 Series FBM cable connections

The standard FBM-supporting 200 Series baseplates enable overall system installation functionality by providing unit increments of 2, 4, and 8 FBM positions in combination with vertical and horizontal mounting.

Features

For FBM-supporting baseplates:

- 2, 4, and 8 module positions in combination with vertical and horizontal mounting
- Field connection for I/O termination assemblies, redundant adapters and module identifiers for each module
- DIP switch for identification of certain Modular Baseplates
- Adding additional 200 Series baseplates without removing the system from service (requires redundant bus)

For FCP280 and FDC280 baseplates support:

- Connection for optional GPS time strobe. All non-FDC280 modules require splitters/terminators for time strobe connections. FDC280 baseplates support direct connection

All baseplates except the FDC280 baseplate (RH101KF) support:

- Connection to the 2 Mbps Module Fieldbus for the Standard Fieldbus Modules, or to a 268 Kbps Fieldbus for the 100 Series FBMs
- Splitters/terminators for A/B Fieldbus
- Backwards compatibility with existing I/O subsystems allowing for future expansion without additional interface hardware
- Primary and secondary 24 V dc power and communications connections
- Keyed positions dedicated to individual CP-type modules such as the FCP280, FDC280, or FCM/FBM only, depending on the baseplate type
- Passive backplane to increase system reliability

200 Series Baseplate Mounting

Most 200 Series baseplates are available in three basic mounting configurations — horizontal DIN rail mount (see Figure 1, page 4), vertical DIN rail mount (see Figure 2, page 5), or either horizontal or vertical DIN rail mount provided the baseplate itself remains in the horizontal orientation (see Figure 3, page 5). Either of these mounting configurations can be employed internal to an enclosure, external to an enclosure, or mounted on a secure DIN rail.

Figure 1 - Horizontal DIN Rail Mounted 200 Series Baseplates

Horizontal-Mounted Standard FCP280 Baseplate (RH924YL)



FCM/FBM 2-position, RH926KE

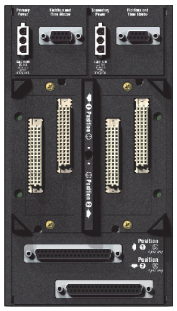

Dual Cable FCP280 Baseplate (RH100JX)



FBM and/or FCM 4-position, RH926HM

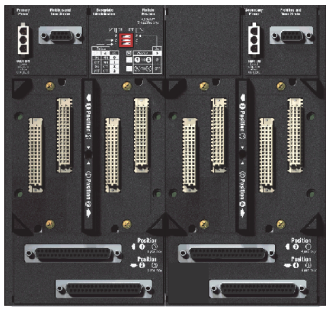

FBM and/or FCM 8-position, RH926HT

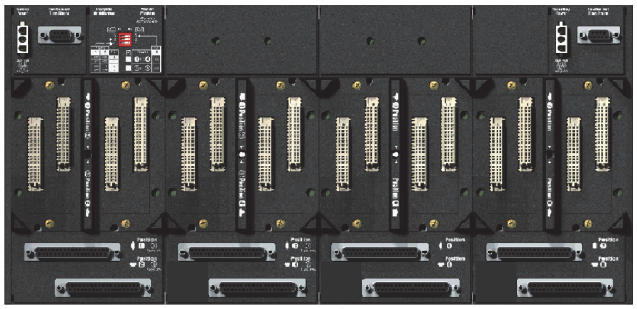

Figure 2 - Vertical DIN Rail Mounted 200 Series Baseplates

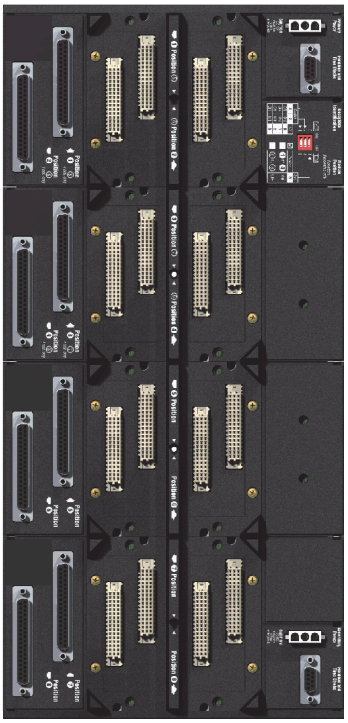

FBM and/or FCM 8-position, RH926JM

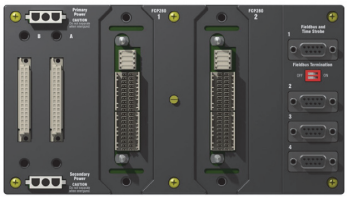

Vertical-Mounted Standard FCP280 Baseplate RH924YF

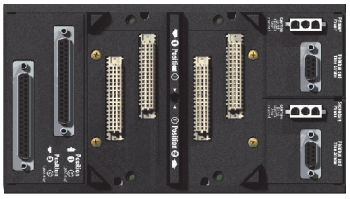

FCM/FBM 2-position, RH926KH

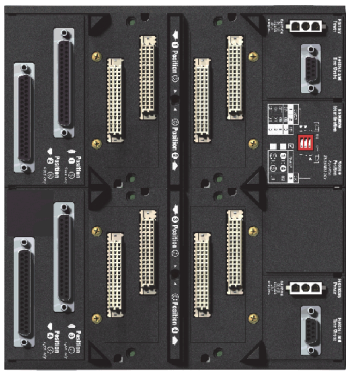

FBM and/or FCM 4-position, RH926JF

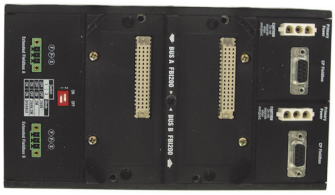

2 FBI200 2-position, RH924RT

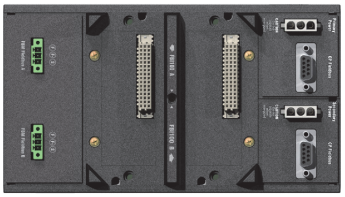

2 FBI100 2-position, P0923LR(1)

(1) Not a RoHS part.

Figure 3 - Horizontal or Vertical DIN Rail Mounted 200 Series Baseplates (Must Remain in Horizontal Orientation)

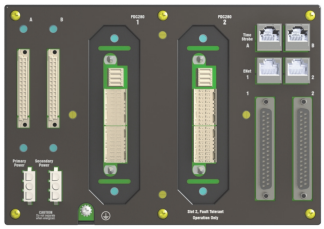

Standard FDC280 Baseplate (RH101KF)



Dual Cable FCP280 Baseplate (RH100JX)

Module Identification

The baseplate-mounted FBMs are identified to the system software by means of a unique, 6-character string called a “letterbug”. Most FBM-supporting baseplates include a DIP switch to help set this letterbug for the FBMs.

The letterbug for the FCP280s and FDC280s is a soft letterbug entered via the buttons on the module’s faceplate.

The letterbug string for a particular FBM when used with an FCP280 is established from these three factors:

- The first four characters of the letterbug, which may be any letter A-Z or digit 0-9 as long as they do not match the first four characters of the FCP280 letterbug.
- The number of the baseplate in the group, as set by means of the baseplate Identification (I.D.) DIP switches on each non-FCP280 baseplate (see Figure 4). FBM-supporting baseplates should be assumed to have this switch unless otherwise specified below.
- The physical position (1-8) of the module on the FBM-supporting baseplate.

Figure 4 - Modular Baseplate ID Switches (For FBM Baseplates)

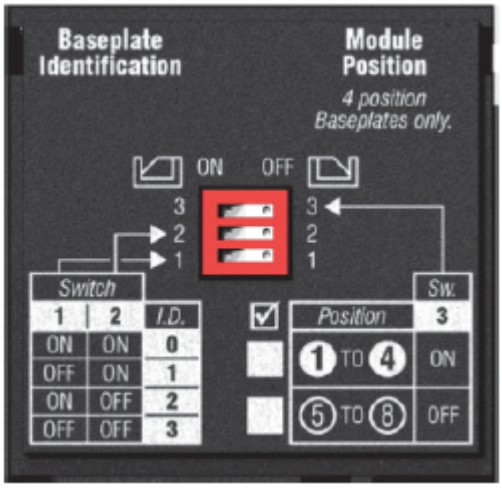

200 Series Baseplate Combinations and Implementation

There are 200 Series baseplates that support the:

- FCP280
- FDC280
- Field Communications Modules (FCMs)
- Fieldbus Isolator/Filters (FBI200s and FBI100s)
- Fieldbus Modules (FBMs)

The baseplates support various combinations of these products depending on the capabilities of the specific baseplate.

Various sizes of 200 Series baseplates allow you to incrementally upgrade existing systems or to create small systems. Implementation of these 200 Series baseplates allow you to place the control processor within the same enclosure as other FBMs.

Each 200 Series baseplate and its supported functionality is described below.

2-Position 200 Series Baseplates

The following 2-position 200 Series baseplates support a:

- Non-fault-tolerant (single module) or fault-tolerant pair of FCP280s (horizontal and vertical)
- Non-fault-tolerant (single module) or fault-tolerant pair of FDC280s (vertical)
- Single module or redundant pair (two identical single modules) of FCMs, or up to two FBMs (horizontal and vertical)
- Single module or redundant pair of FBI200s
- Single module or redundant pair of FBI100s

FCP280 Only 2-Position Baseplate

(See Figure 1, page 4 *and* Figure 2, page 5*)*

These 2-position baseplates support a non-fault-tolerant single or fault-tolerant pair of FCP280s, as well as two copper (RH924UQ) or fiber (RH924WA) adapters, required for connection to the Foxboro DCS Control Software.

The FCP280 baseplate provides support for four HDLC fieldbuses (PIO channels). Fieldbus port 1 can be terminated, if needed, by the DIP switches provided on the baseplate. Fieldbus ports 2-4 are internally terminated in the FCP280 baseplates and no external hardware or switches are required for their termination.

An optional dual cable version of this baseplate supports four PIO channels but has separate A versus B bus connectors. The dual cable baseplate also has dedicated connectors for the optional Time Strobe inputs. The dual cable baseplate can be installed on either a horizontal or vertical DIN rail, provided the baseplate itself remains in the horizontal orientation.

The FCP280 baseplates can be added in the field to existing or new configurations. They have similar dimensions as the FCP270 Only 2-position baseplates for ease of replacement.

When upgrading existing CP60 systems to use FCP280s, you can recover an additional two FBM positions after removal of the old FCM10E/FCM10Efs.

FDC280 Only 2-Position Baseplate

(See Figure 2, page 5*)*

This 2-position vertical baseplate supports a non-fault-tolerant single or fault-tolerant pair of FDC280s, as well as two copper (RH924UQ) or fiber (RH924WA) adapters, required for connection to the Foxboro DCS Control Software. It also has Ethernet and Serial connectors for use in communicating with its field devices through a customer-supplied network.

It can be installed on either a horizontal or vertical DIN rail, provided that the baseplate itself remains in the horizontal orientation. However, to meet Marine certification requirements, it must be installed on a horizontal DIN rail only.

The FDC280 baseplate can be added in the field to existing or new configurations. The FDC280 baseplate has larger dimensions than the 2-position FCP280 baseplate. However since the FDC280 does not require FBMs to connect to the field devices, its overall footprint saves space over an FCP/FBM solution.

FCM/FBM 2-Position Modular Baseplates

(See Figure 1, page 5 *and* Figure 2, page 5*)*

These 2-position Modular Baseplates support FCMs/FBMs. These Modular Baseplates do not have a baseplate identification DIP switch. Therefore, these baseplates have a hardwired address as baseplate 0, with FBM addresses 1 and 2. They can be added to existing or new groupings of Modular Baseplates.

4-Position Modular Baseplates

Seven different 4-position Modular Baseplates:

- Support 4 FBMs or 2 FCMs and 2 FBMs
- Have horizontal and vertical versions
- Have three active baseplate I.D. switches, and the third baseplate I.D. switch selects operation as the first-half or second-half of an 8-position Modular Baseplate

FBM and/or FCM 4-Position Modular Baseplates

(See Figure 1, page 4 *and* Figure 2, page 5*)*

These 4-position Modular Baseplates supports FBM/FCMs. These Modular Baseplates have a baseplate identification DIP switch.

These Modular Baseplates can be used on system installations that require increased I/O distribution and future upgrades.

8-Position Modular Baseplates

(See Figure 1, page 4 *and* Figure 2, page 5*)*

These 8-position Modular Baseplates support FBMs/FCMs. These Modular Baseplates have a baseplate identification DIP switch.

These Modular Baseplates mount up to 32 FBMs (four 8-position baseplates) in a standard enclosure. They supersede the P0914XA/XB baseplates and maximize module/baseplate density.

For Intrinsically Safe applications, the use of Pepperl and Fuchs Intrinsic Safe baseplates is recommended. See *Intrinsically Safe Termination Assembly - Base Plate (ISTA-*BP**)* (PSS 31H-2Y12).

200 Series Baseplate-to-Baseplate Interconnections

200 Series baseplates are interconnected over a 2 Mbps HDLC, redundant, serial bus (Module Fieldbus). Baseplate inter-connections for A/B Module Fieldbus connections are shielded twistedpair cables to reduce the effects of noise.

All connectors are labeled to indicate their position and/or function on the 200 Series baseplates (see Figure 5). All module connectors have module guides to ensure the correct insertion of each module into the 200 Series baseplate. Primary and Secondary power connectors are direct connections from the FPS480-24, FPS400-24, FPS240-24, or FPS120-24 power supply. Field I/O connectors provide connections to various termination assemblies for actual connection to the I/O points in the plant.

FCM2F2/4/10 modules provide for fiber optic extension (baseplate-to-baseplate) of the Module Fieldbus.

For an explanation of the connectors on the FDC280 baseplate, see *Field Device Controller 280 (FDC280)* (PSS 41H-2FDC280).

Figure 5 - 200 Series Baseplate Connections (Example FBM Baseplate Shown)

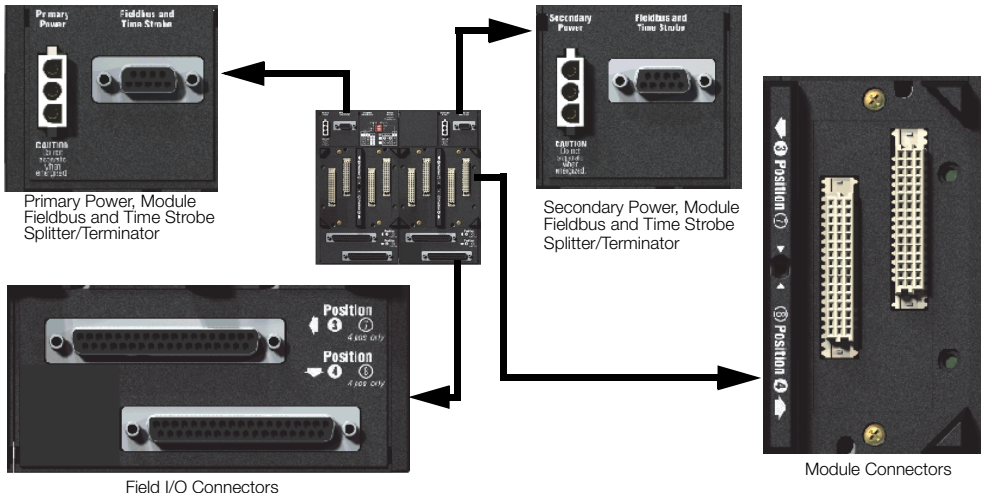

In addition, another type of termination assembly called the baseplate-mounted termination assembly can mount directly onto the field I/O connectors of an FBM-supporting 200 Series baseplate. These TAs provide field I/O wiring support for two of their associated FBMs in paired slots (that is, in positions 1 and 2, 3 and 4, 5 and 6, or 7 and 8), as shown in Figure 6.

Figure 6 - Baseplate-Mounted Termination Assembly

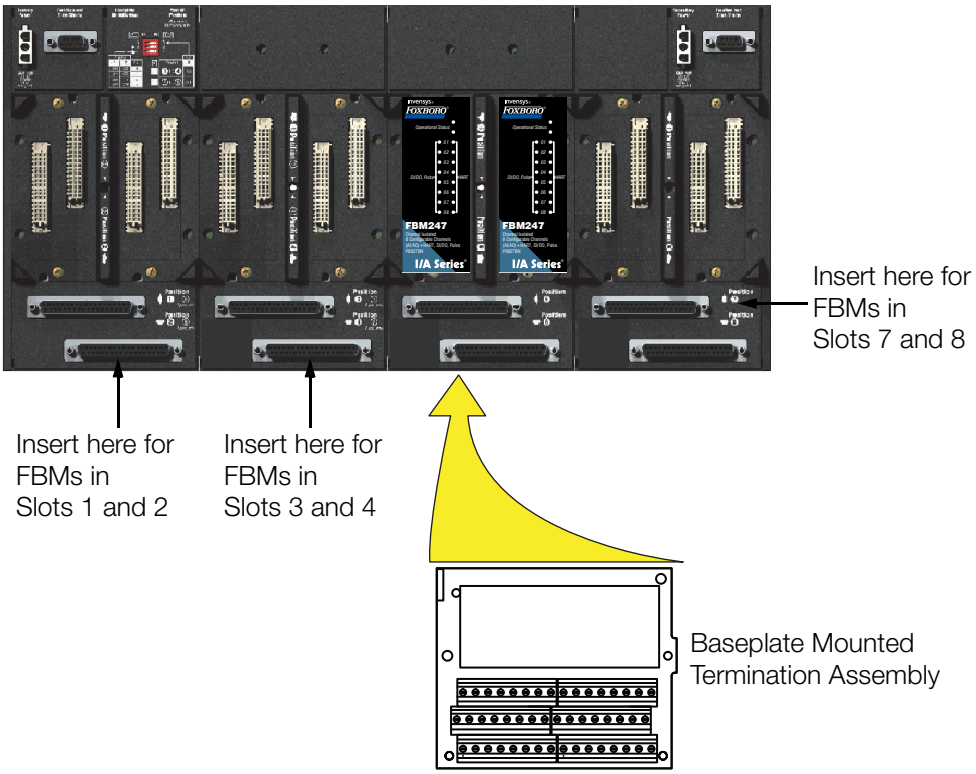

Module Placement and Removal

The following rules must be observed with regard to placement of modules (CPs, FCMs, or FBMs) on their corresponding 200 Series baseplates. (See *Standard 200 Series Subsystem Overview* (PSS 41H-2SOV) and *Compact 200 Series I/O Subsystem Overview* (PSS 41H-2COV) for the various communication topologies used with the 200 Series baseplates.)

- Non-redundant FBMs – Can be placed in any available position.
- Redundant FBMs – Must be placed in adjacent odd/even paired positions.
- FCP280 and FDC280 – These modules are positioned only on the baseplates that are dedicated to the FCP280 or FDC280.
- FBI200 – The FBI200 module(s) are positioned on the Modular Baseplate dedicated to the FBI200.
- FBI100 – The FBI100 module(s) are positioned only on the Modular Baseplate dedicated to the FBI100.

FCPs, FCMs, FBI100s, and FBMs can be removed/replaced from their corresponding 200 Series baseplates without removing field device termination cabling, power, or communications cabling.

Splitters and Terminators

The following Splitters and Terminators can be used with 200 Series baseplates:

- The Fieldbus Baseplate Terminator (RH916RB) is used to terminate either the CP end of the HDLC fieldbus or the last 200 Series baseplate in the daisy chain when Time Strobe or split A/B fieldbus cables are not required. (See Figure 7, page 11.)
- Fieldbus Baseplate Terminator/Splitter (RH926KW for non-FCP280 baseplates, RH924ZJ for Fieldbus port 1 on an FCP280 baseplate, or RH928CY for any Fieldbus port on an FCP280 baseplate) allows splitting of the A and B Module Fieldbus signals into different cables. This splitter can be used to interconnect optional redundant cables between Modular Baseplates. It can also be used to terminate both the fieldbus and time strobe signals. (See Figure 8, page 13 and Figure 9, page 13.)
- Time Strobe Fieldbus Baseplate Terminator (RH926KZ or RH924ZQ) connects the optional “A” and/or “B” time strobe signals to the Modular Baseplates. This terminator also terminates the fieldbus signals. (See Figure 10, page 14.)
- Fieldbus Splitter (RH928CV) (see Figure 11, page 14) allows any of the Fieldbus ports on the FCP280 baseplates to connect to the twinaxial 268 Kbps fieldbus cables. RH928CV includes both a connector to any of the Fieldbus ports on the FCP280 baseplate, and a termination cable assembly (TCA) termination block similar to two of the P0903VY termination blocks joined together. See *Field Control Processor 280 (FCP280)* (PSS 41H-1FCP280) for the usage of this splitter.
- The standard FCP280 baseplate connects to 100 Series FBMs. However, the dual cable FCP280 baseplate is not compatible with 100 Series FBMs.

100 Series (Y-module) FBMs or 100 Series-based Migration products are connected to an FCP280 Modular Baseplate through an extended remote Fieldbus. When the FCP280 is connected directly to the 100 Series FBMs (communicating at 268 Kbps), the maximum twinaxial cable Fieldbus length is 915 m (3200 ft). For a FCP280 with an FBI200, the maximum Fieldbus length is 60 m (198 ft) between the FCP280 and FBI200, and 1850 m (6000 ft) from the FBI200s to 100 Series FBMs.

For an FBI200, the maximum Fieldbus length is up to 305 m (1000 ft) for 2 Mbps data for 200 Series FBMs, and up to 1830 m (6000 ft) for 268 Kbps data for 100 Series FBMs.

See PSS 41H-1FCP280 for the configurations through which the 100 Series FBMs can connect to the FCP280.

Figure 7 - Fieldbus Baseplate Terminator



Figure 8 - Fieldbus Baseplate Terminator/Splitters — for FCP280 Baseplates

(RH924ZJ)

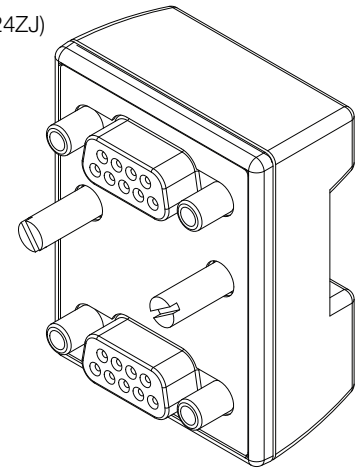

To Fieldbus port on FCP280 baseplate

(RH924CY)

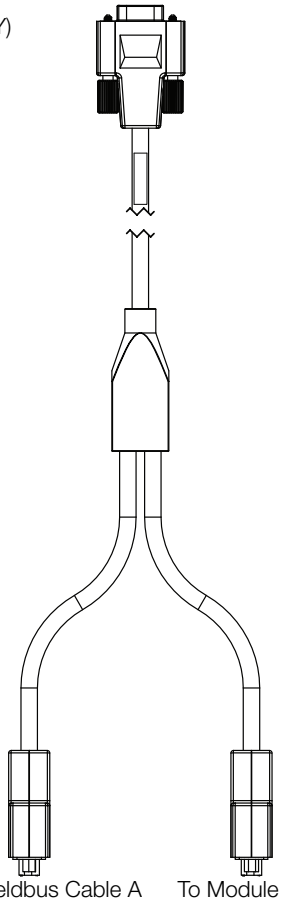

To Module Fieldbus Cable A To Module Fieldbus Cable B

Figure 9 - Fieldbus Baseplate Terminator/Splitter — for Non-FCP280 Baseplates

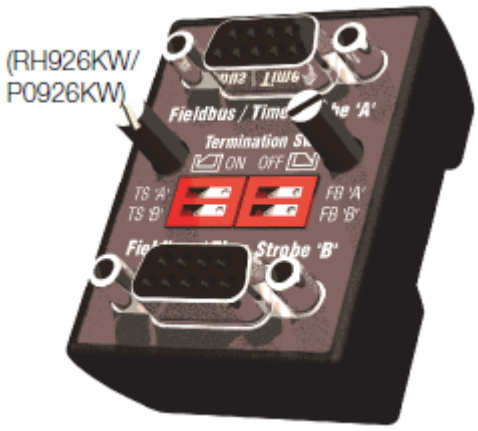

Figure 10 - Time Strobe Fieldbus Baseplate Terminators

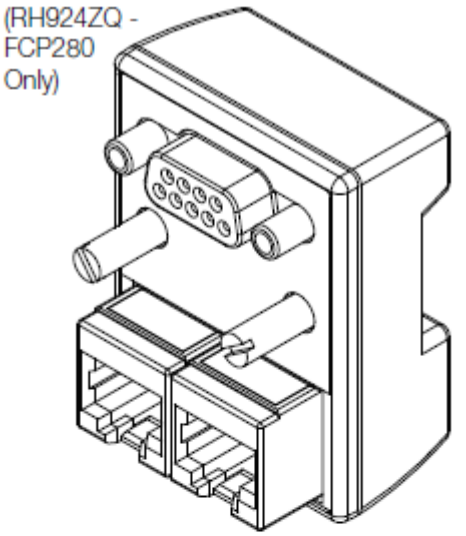



Figure 11 - Extended Fieldbus Splitter for FCP280 Baseplate (Fieldbus Ports 1–4)

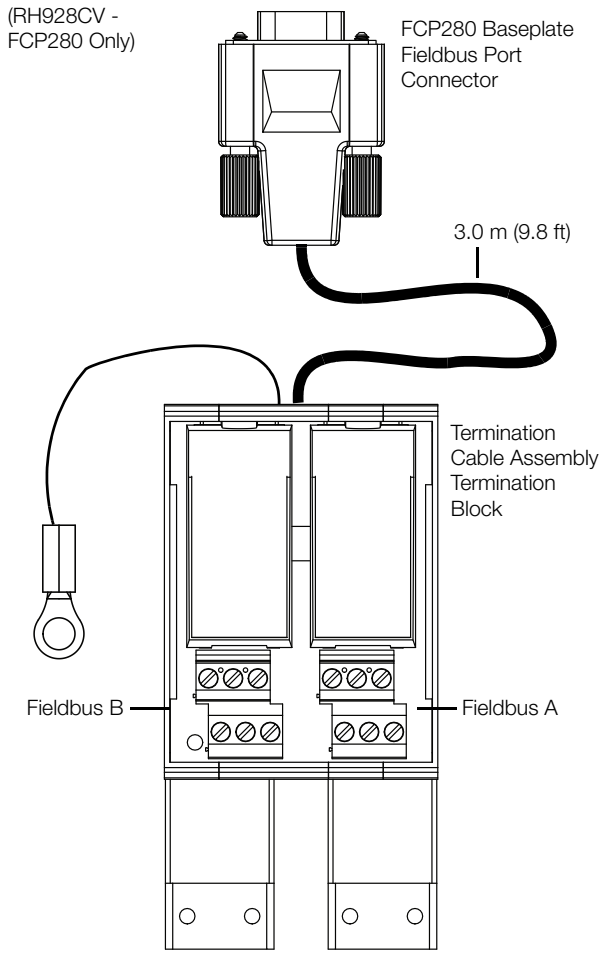

Figure 12 - Extended Fieldbus Splitter/Terminator

(RH926LC/ P0926LC)

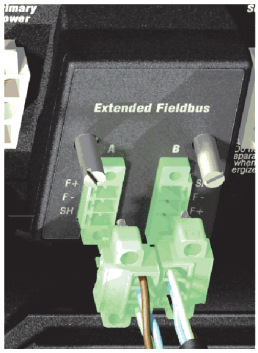

Adding Additional FBM-Supporting 200 Series Baseplates

You can add additional FBM-supporting 200 Series baseplates to existing FBM-supporting 200 Series baseplates without removing the system from service. To add these baseplates while the system is operational requires that the system have redundant (A and B) buses. A/B Module Fieldbus and Time Strobe splitter/terminators are used to split the A/B Module Fieldbus (2 Mbps) allowing redundant baseplate-to-baseplate cabling as well as the addition of 200 Series baseplates without interrupting bus communication.

Functional Specifications

Power Requirements	• Input Voltage Range: 24 V dc
Regulatory Compliance, Electromagnetic Compatibility (EMC)	• *European EMC Directive 2014/30/EU*: Meets: EN61326-1:2013 Class A Emissions and Industrial Immunity Levels
Regulatory Compliance, Product Safety	• *Underwriters Laboratories (UL) for U.S. and Canada*: UL/UL-C listed as suitable for use in Class I, Groups A-D; Division 2; temperature code T4 enclosure based systems. Communications circuits also meet the requirements for Class 2 as defined in Article 725 of the National Electrical Code (NFPA No.70) and Section 16 of the Canadian Electrical Code (CSA C22.1). Conditions for use are as specified in the *Standard and Compact 200 Series Subsystem User's Guide* (B0400FA) • *European Low Voltage Directive 2014/35/EU and Explosive Atmospheres (ATEX) Directive 2014/34/EU*: ATEX (DEMKO) Ex nA IIC T4 Gc certified when connected as described in the *Standard and Compact 200 Series Subsystem User's Guide* (B0400FA). For use in an enclosure suited for an ATEX Zone 2 classified area.
IECEx Certification	IECEx Certified
RoHS Compliance	Complies with European Recast RoHS Directive 2011/65/EU.

Environmental Specifications

	Operating	Storage
Temperature	• Compact and Control Processor: -20 to +60°C (-4 to +140°F) • Standard: -20 to +70°C (-4 to +158°F)	-40 to +70°C (-40 to +158°F)
Relative Humidity	5 to 95% (noncondensing)	5 to 95% (noncondensing)
Altitude	-300 to +3,000 m (-1,000 to +10,000 ft)	-300 to +12,000 m (-1,000 to +40,000 ft)
Contamination	• Non-Enclosure Mounted: Class G3 (Harsh) as defined in ISA Standard S71.04 • Enclosure-Mounted: Class G3 (Harsh) as defined in ISA Standard S71.04. Pollution degree 2 as defined in IEC 664-1.	

Physical Specifications

Mounting	• DIN Rail: 200 Series baseplates mount on a non-isolated, mechanically supported horizontal or vertical DIN rail, which can be internal to, or external to an enclosure. The 200 Series baseplate attaches to the DIN rail by means of fasteners. • Rack Mount: A mounting kit (P0930AS) is available for horizontal mounting of the 200 Series baseplate in a standard, 483 mm (19-inch) rack. This kit provides a 25.4 mm (1 inch) mounting depth.
Weight	• Module: 284 g (10 oz) approximate
Dimensions	See Dimensions - Nominal, page 18
Mass (Without Modules)	Maximum 0.91 kg (2.0 lb) for 8-position Modular Baseplate.
Rack Mounting Bracket	Material: Steel, Cold-Rolled, 0.0598 mm (16 Gauge)
Construction	• Material: PC and ABS, flame rating UL94 V0 • DIN Rail Fastener: Number fasteners depends on 200 Series baseplate size. • Color: Black
Power Cabling	• Cable Part Numbers and Lengths: ◦ RH926KK - 0.4 m (16 in) ◦ RH923NG (Y-Cable) - 0.5 m (20.5 in) ◦ RH926KL - 0.9 m (3 ft) ◦ RH926KM - 1.2 m (4 ft) ◦ RH926KN - 1.5 m (5 ft) ◦ RH926KP - 1.8 m (6 ft) ◦ RH926KQ - 2.1 m (7 ft). ◦ RH931NC - 2.4 m (8 ft) ◦ RH931ND - 2.7 m (9 ft) ◦ RH931NE - 3.1 m 10 ft) ◦ RH931NF - 3.4 m (11 ft) ◦ RH931NG - 3.7 m (12 ft)
Module Fieldbus Cabling	• Cable Lengths: 0.125 m (5 in) up to 60 m (198 ft) • Overall Cable Length: 60 m (198 ft) total allowable cable length

Dimensions - Nominal

Figure 13 - Vertical Mounted 200 Series Baseplates

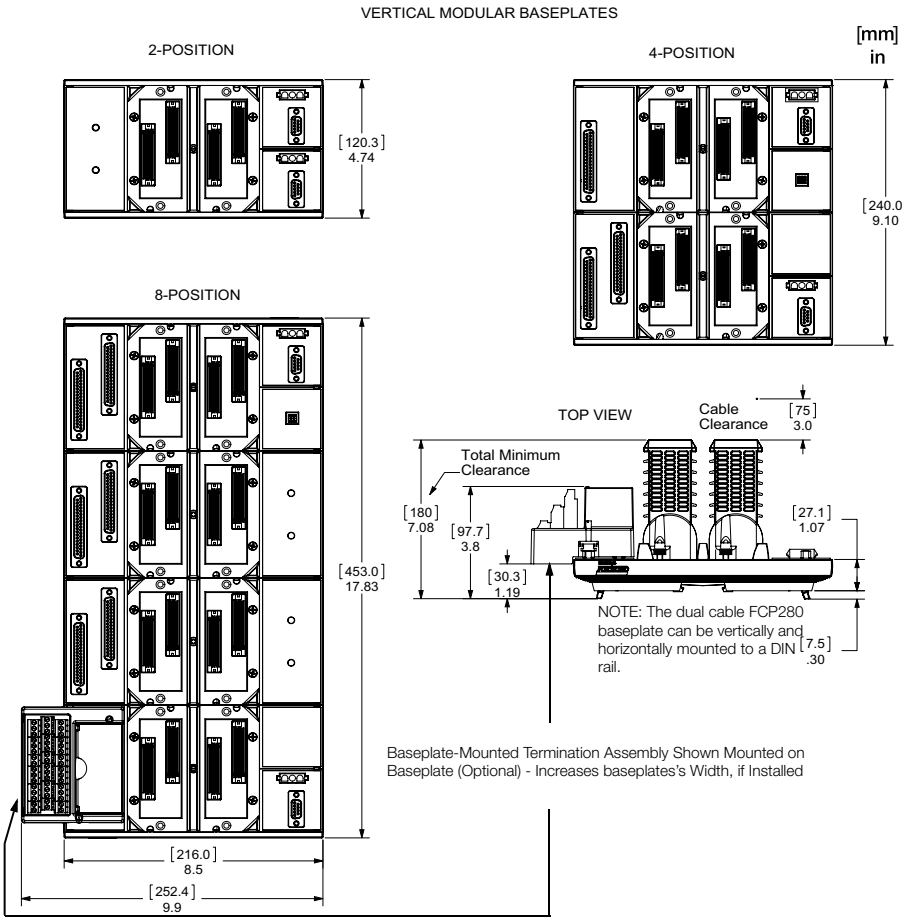

NOTE: These are clearance dimensions for the 200 Series Fieldbus Modules installed in baseplates. For the clearance dimensions required for larger modules such as the FCP280, see the Product Specification Sheet associated with these larger modules. Cable clearance is the same for both 200 Series FBMs and other modules, such as the FCP280.

Figure 14 - Horizontal Mounted 200 Series Baseplates

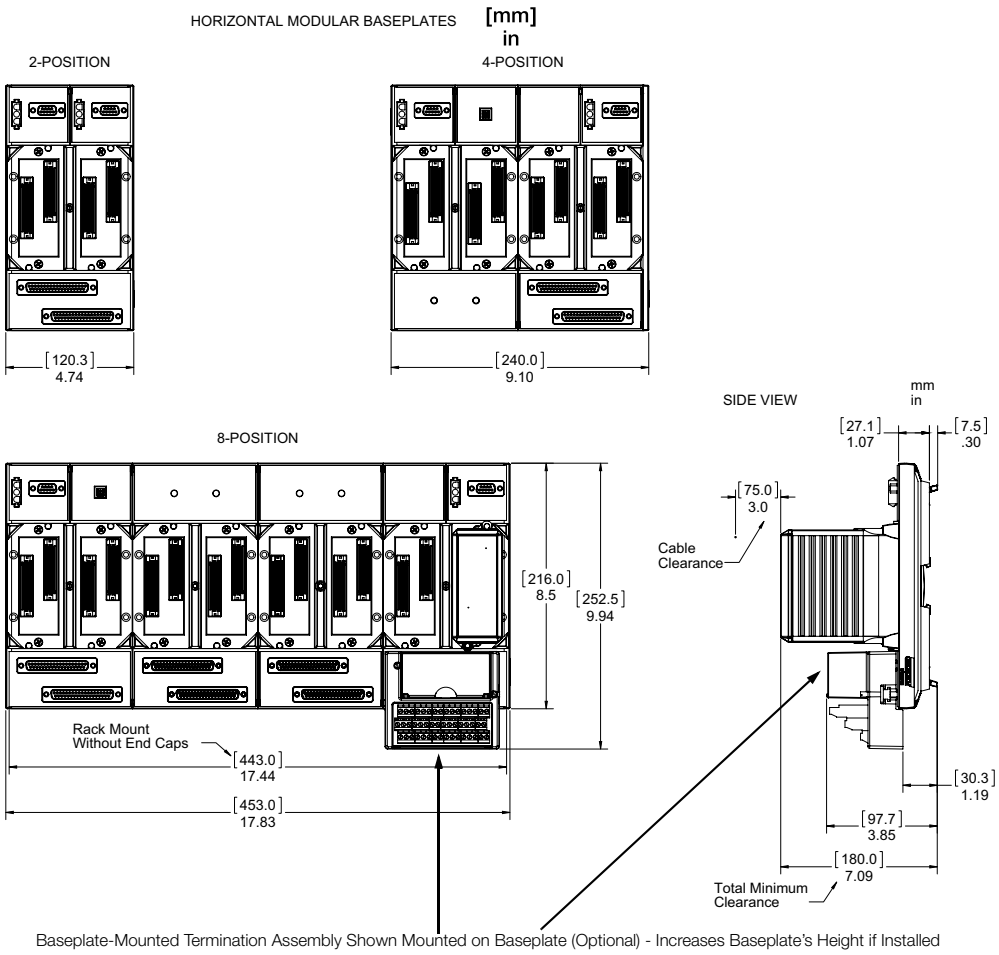

NOTE: These are clearance dimensions for the 200 Series Fieldbus Modules installed in baseplates. For the clearance dimensions required for larger modules such as the FCP280, see the Product Specification Sheet associated with these larger modules. Cable clearance is the same for both 200 Series FBMs and other modules, such as the FCP280.

Figure 15 - Horizontal or Vertical Mounted Dual Cable FCP280 Baseplate (RH100JX)

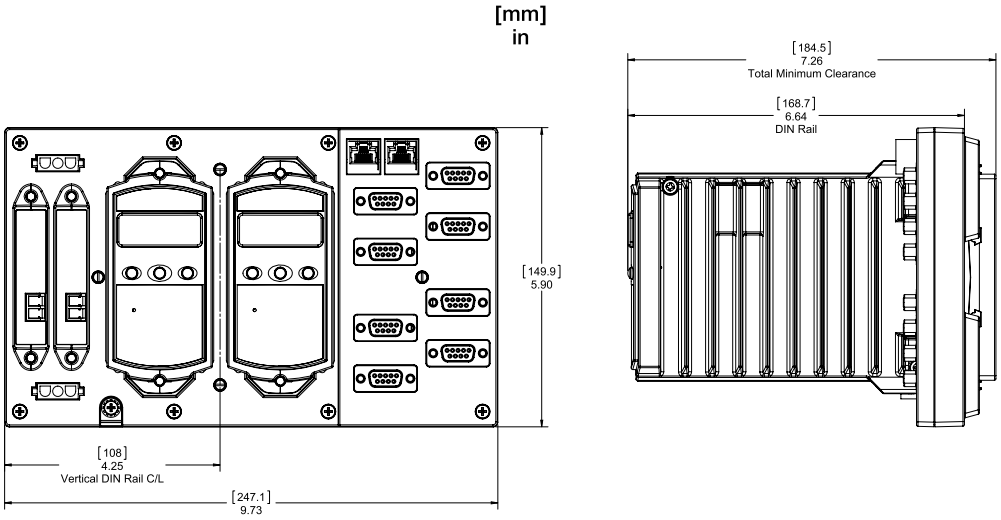

NOTE: The dual cable FCP280 baseplate is slightly larger than the standard 2-position CP baseplates. It can be installed on either horizontal or vertical DIN rails, provided that the baseplate remains in the horizontal orientation shown here.

Figure 16 - Horizontal Mounted Standard FCP280 Baseplate (RH924YL)

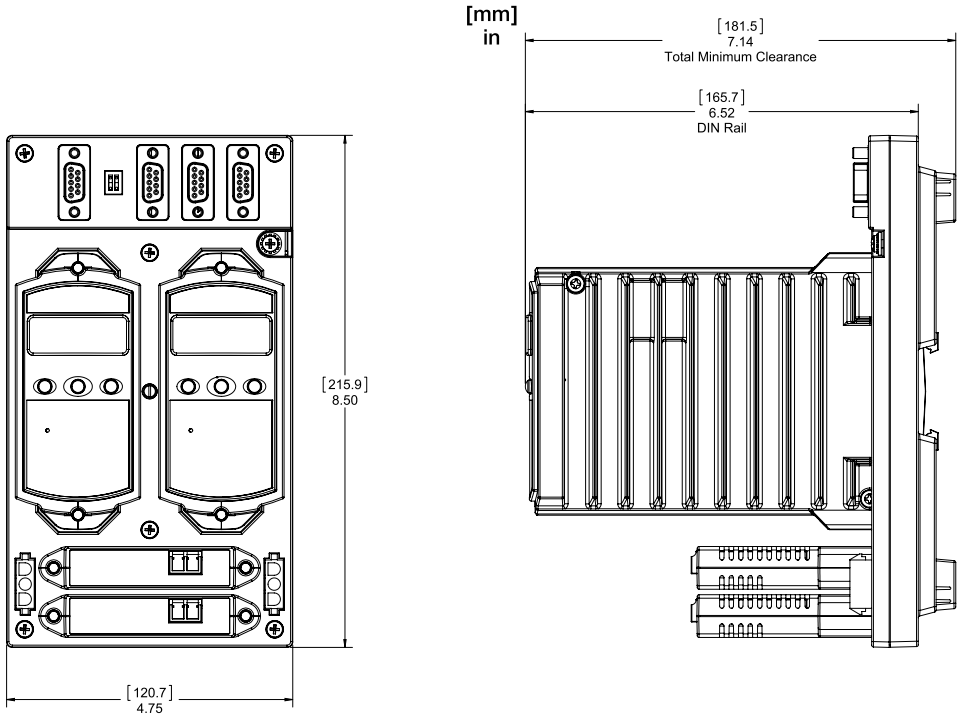

NOTE: The vertical version of the standard FCP280 baseplate has the same dimensions of this version, only oriented 90 degrees to the right.

Figure 17 - Horizontal or Vertical Mounted Standard FDC280 Baseplate (RH101KF)

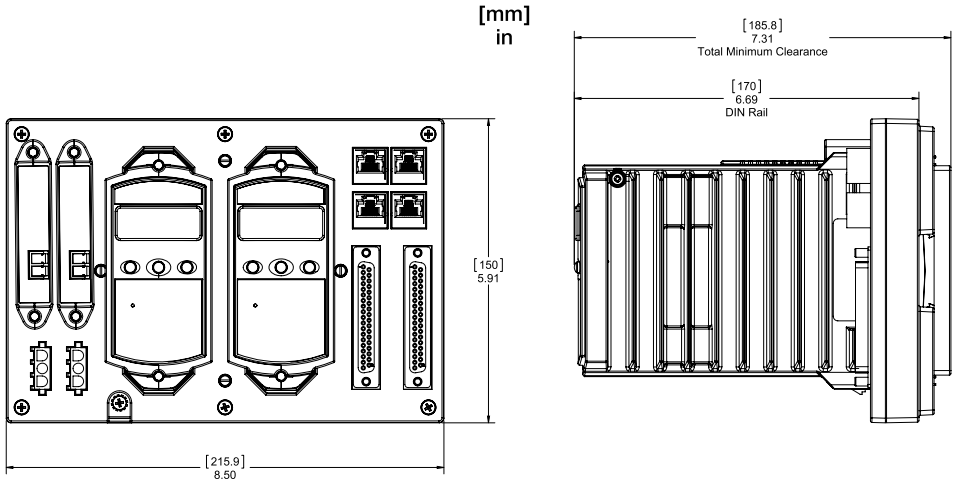

NOTE: The baseplate can be installed on either horizontal or vertical DIN rails, provided that the baseplate remains in the horizontal orientation shown here. However, for Marine certification, the baseplate must be installed on a horizontal DIN rail.

Related Product Documents

Document Number	Description
PSS 41H-2SOV	*Standard 200 Series Subsystem Overview*
PSS 41H-2COV	*Compact 200 Series I/O Subsystem Overview*
PSS 41H-2FCP280	*Field Control Processor 280 (FCP280)*
PSS 31H-2Y12	*Intrinsically Safe Termination Assembly - Base Plate (ISTA-*BP*)*
PSS 41H-2FDC280	*Field Device Controller 280 (FDC280)*
B0400FA	*Standard and Compact 200 Series Subsystem User's Guide*

Proposition 65

WARNING: This product can expose you to chemicals including lead and lead compounds, which are known to the State of California to cause cancer and birth defects or other reproductive harm. For more information go to www.P65Warnings.ca.gov.

Schneider Electric Systems USA, Inc.
70 Mechanic Street
Foxboro, Massachusetts 02035–2040
United States of America

Global Customer Support: https://pasupport.se.com

As standards, specifications, and design change from time to time, please ask for confirmation of the information given in this publication.

© 2014–2023 Schneider Electric. All rights reserved.

PSS 41H-2SBASPLT, Rev C