Foxboro™ DCS

FBM247, Current/Voltage Analog/Digital/Pulse I/O Configurable Module

PSS 41H-2S247

Product Specification

May 2025



https://www.se.com

Legal Information

The information provided in this document contains general descriptions, technical characteristics and/or recommendations related to products/solutions.

This document is not intended as a substitute for a detailed study or operational and site-specific development or schematic plan. It is not to be used for determining suitability or reliability of the products/solutions for specific user applications. It is the duty of any such user to perform or have any professional expert of its choice (integrator, specifier or the like) perform the appropriate and comprehensive risk analysis, evaluation and testing of the products/solutions with respect to the relevant specific application or use thereof.

The Schneider Electric brand and any trademarks of Schneider Electric SE and its subsidiaries referred to in this document are the property of Schneider Electric SE or its subsidiaries. All other brands may be trademarks of their respective owner.

This document and its content are protected under applicable copyright laws and provided for informative use only. No part of this document may be reproduced or transmitted in any form or by any means (electronic, mechanical, photocopying, recording, or otherwise), for any purpose, without the prior written permission of Schneider Electric.

Schneider Electric does not grant any right or license for commercial use of the document or its content, except for a non-exclusive and personal license to consult it on an "as is" basis.

Schneider Electric reserves the right to make changes or updates with respect to or in the content of this document or the format thereof, at any time without notice.

To the extent permitted by applicable law, no responsibility or liability is assumed by Schneider Electric and its subsidiaries for any errors or omissions in the informational content of this document, as well as any non-intended use or misuse of the content thereof.

Overview

In many plant situations, the signal types associated with an installation are not well known until late in the project. The FBM247 provides the capability to accept a range of standard analog, discrete, and pulse inputs that are user-selectable and changeable at the discretion of the engineer. The HART® input signals are electrically compatible with the standard 4 to 20 mA inputs.

The FBM247, Channel-Isolated Current/Voltage Analog/Digital/Pulse I/O Module contains eight channels which can be individually configured for a range of analog, digital, and pulse field I/O signals.

Each I/O channel is galvanically isolated from other channels and ground.

Three types of passive termination assemblies (TAs) are available for the FBM247:

- DIN rail mounted TA, similar to those used with the other 200 Series Fieldbus Modules (FBMs).
- Compression Baseplate-mounted TA (RH101KA), which provides field I/O wiring support for one FBM247, as shown in Figure 1, page 3 below. This TA mounts directly onto the FBM247's field I/O connector on the 200 Series baseplate.
- Spring Cage Baseplate-mounted TA (RH924WG), which provides field I/O wiring support for two FBM247s in side-by-side odd-even paired slots (that is, in positions 1 and 2, 3 and 4, 5 and 6, or 7 and 8), as shown in Figure 2, page 4. (FBM247s in paired slots receive the same point inputs; however, they do not operate as a redundant pair.) This TA mounts directly onto the field I/O connectors on the 200 Series baseplate.

Figure 1 - Baseplate-Mounted Termination Assembly (RH101KA) for Single FBM247

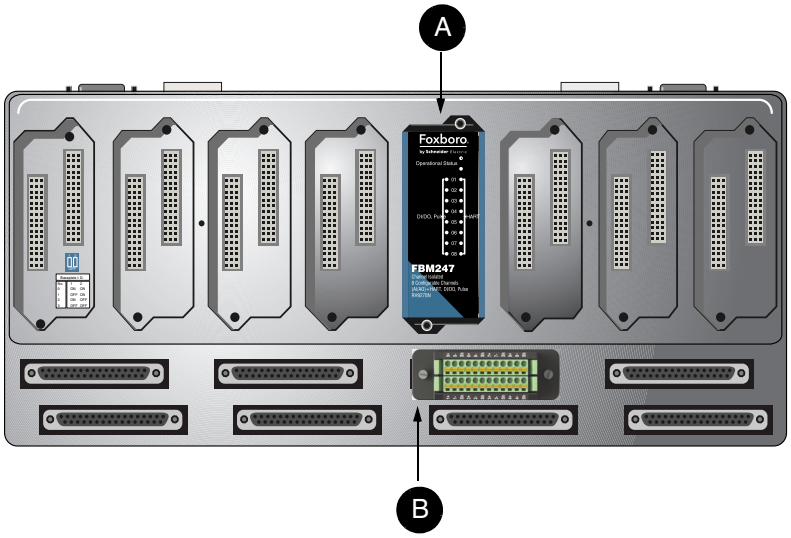

Legend	
A	Standard FBM247
B	Baseplate-Mounted Termination Assembly (RH101KA)

Figure 2 - Baseplate-Mounted Termination Assembly (RH924WG) for FBM247 Pair

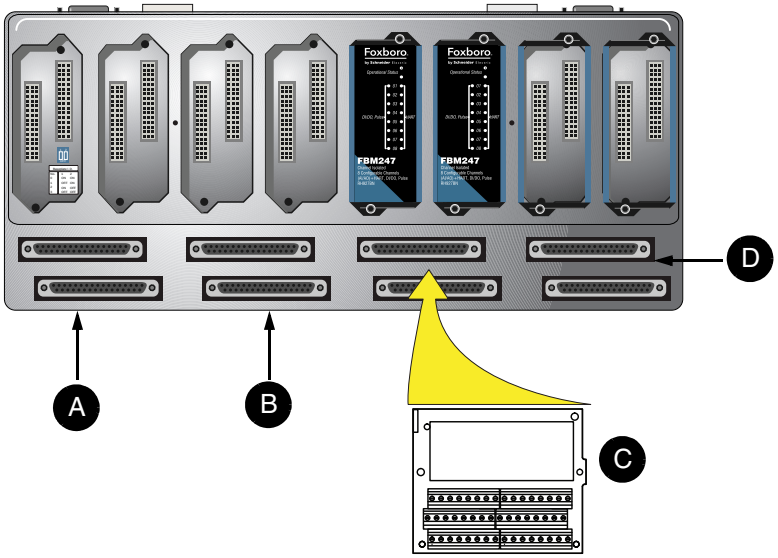

Legend	
A	Install TA on Slots 1 and 2 for FBM247s
B	Install TA on Slots 3 and 4 for FBM247s
C	Baseplate-Mounted Termination Assembly (RH924WG)
D	Install TA on Slots 7 and 8 for FBM247s

The FBM247 can serve as a HART communications field device host, enabling Foxboro™ DCS to request and receive two digital messages per second from the field device. The message pass-through capability can be used to support HART universal, common practice, and device-specific commands, but it cannot support the burst communication mode. These commands are implemented using the Foxboro DCS Field Device Expert for HART or PACTware. For details, see *Field Device Expert for HART Devices Control and I/O* (PSS 41S-10FDMHRT) or *Model PC50 Field Device Tool for Use with Intelligent Field Devices* (PSS 2A-1Z3 G).

The FBM247 must be used with I/A Series system software, v8.7 to v8.8 and Foxboro DCS Control Core Services software, v9.0 or later. Use ICC or Control Software to configure FBM247s. This FBM type is not supported by IACC.

When used with the baseplate-mounted TAs, there is no need for a separate termination or marshalling enclosure. When installed in K-Series or equivalent system enclosures with baseplate-mounted TAs, the FBM247 enables the system enclosure to support up to 96 FBMs and their associated Field Control Processors (FCP) from a single enclosure's footprint. See *K-Series Enclosures Overview* (PSS 41H-2KOV) or equivalent PSS for a complete list of modules supported in the system enclosures.

The FBM247 is electrically compatible with standard HART signals.

Features

- Eight individually isolated channels to support:
- HART Analog Input (AI)/Analog Output (AO) 4-20 mA
- Analog input signal (4-20 mA) that complies with the NAMUR NE 43 standard signal range
- 0-20 mA AI/AO, non-HART
- 0-10 V and 0-5 V AI, non-HART
- Digital dry contact sense 24 VDC
- Discrete voltage monitor, configurable 0 and 1 thresholds 0-10 V
- NAMUR sensor discrete input Signal level according to DIN EN 50227 (NAMUR):
  - “On” at 2.1 mA DC with short circuit detection at > 6 mA
  - “Off” at 1.2 mA DC with open detection at <0.25 mA
- Pulse count, frequency, acceleration and jerk, contact sense or voltage input
- Discrete Output 24 V, 20 mA current or solid state switch output
- Rugged design suitable for enclosures in Class G3 (harsh) environments
- Executes programs for Discrete Input, Pulse Count, Sequence of Events and Transient Data Recording with support for Sustained and Momentary Digital Outputs
- Enables higher utilization of I/O points in each enclosure - fewer points on each FBM are likely to be left unused due to the versatility of the FBM247’s I/O points
- Passive Termination Assemblies (TAs) - DIN rail mounted or 200 Series baseplate mounted - for locally or remotely connecting field wiring to the FBM247
- Optional baseplate-mounted TAs attach directly to a 200 Series baseplate, helping to eliminate the need for mounting a separate TA on a DIN rail for the FBM247, and requiring space for the TA’s cable in an enclosure.
- Range of I/O support and baseplate-mounted TAs reduce the amount of cabling and mounting space, helping to eliminate the need for separate marshalling enclosures and cables required for field I/O wiring support.
- Enables sites to reduce the number of separate types of 200 Series FBMs maintained as spares, by replacing them with a single type of 200 Series FBM - the FBM247, which supports a wide range of analog, digital, and pulse field I/O applications.

High Accuracy

For high input accuracy, the module incorporates a 16-bit Sigma-Delta converter that can provide new analog input values for each channel every 100 milliseconds. For outputs, a 13-bit D/A is used.

Standard Design

FBM247 has a rugged extruded aluminum exterior for physical protection of the circuits.

Enclosures specially designed for mounting the FBMs provide various levels of environmental protection, up to harsh environments (Class G3), per ISA Standard S71.04.

Visual Indicators

Light-emitting diodes (LEDs) incorporated into the front of the modules provide visual indication of the module operational status, and communication activity of the input/output channels.

Their functionality varies depending on the type of I/O signal used on each channel:

- Red and green LEDs provide indication of the FBM operational status
- Yellow LEDs indicate HART communication activity for each channel
- Yellow LEDs are provided to indicate the On or Off state of the discrete input or output channels

Easy Removal/Replacement

The module can be removed/replaced without removing field device termination cabling, or power or communications cabling.

Sequence of Events

The Sequence of Events (SOE) software package is used for acquisition, storage, display, and reporting of events associated with discrete input points in a control system. SOE, using the optional GPS based time synchronization capability, supports data acquisition across control processors at intervals of up to one millisecond, depending on the signal source.

See *Sequence of Events* (PSS 31S-2SOE) to learn more about this package, and *Time Synchronization Equipment* (PSS 41H-4C2) for a description of the optional time synchronization capability.

Fieldbus Communication

A Fieldbus Communications Module or a Control Processor interfaces to the redundant 2 Mbps module Fieldbus used by the FBMs. The FBM accepts communication from either path (A or B) of the 2 Mbps Fieldbus — should one path fail or be switched at the system level, the module continues communication over the active path.

Modular Baseplate Mounting

The module mounts on a Modular baseplate, which accommodates up to eight FBMs. The Modular baseplate is either DIN rail mounted or rack mounted, and includes signal connectors for a redundant 2 Mbps HDLC module Fieldbus, redundant independent DC power, and termination cables or baseplate-mounted Termination Assemblies (TAs).

Termination Assemblies

Field I/O signals connect to the FBM subsystem via:

- DIN rail mounted Termination Assembly (TA), or
- Baseplate-mounted TA

NOTE: A shield terminal connection (SH) is provided for each channel. The shield terminals are connected to the ground at the system power supply.

The TAs used with the FBM247 are described in Termination Assemblies And Cables, page 15.

Functional Specifications

Supported HART Instrument Types	HART instruments compliant to Version 5, 6, or 7 of the HART specifications may be used.
Input/Output Channels	Eight I/O channels, each individually configurable as: • HART 4-20 mA analog input or analog output • (For Rev. D or later versions of this FBM247) HART 4-20 mA analog input with NAMUR NE 43 support • (non-HART) 0-20 mA analog input or analog output • (non-HART) 0-10 V and 0-5 V analog input • Digital dry contact sense 24 VDC • NAMUR[a] sensor discrete input - Signal level according to DIN EN 50227 (NAMUR) ◦ “On” at 2.1 mA DC with short circuit detection at > 6 mA ◦ “Off” at 1.2 mA DC with open detection at < 0.25 mA ◦ Digital voltage input, configurable 0 and 1 thresholds 0-10 V • Pulse count, frequency, acceleration or jerk, contact sense or voltage input • Digital output 24 V, 20 mA current or switch Discrete inputs have configurable current or voltage thresholds when not in SOE mode. Channel types are independently configurable without taking the module or other channels offline. Each channel is isolated and independent.
Input/Output Channels Specifications	See Input/Output Channels Specifications, page 9
Input/Output Channel Isolation	Each channel is galvanically isolated from all other channels and earth (ground). The module withstands, without damage, a potential of 600 VAC applied for one minute between any channel and ground, or between a given channel and any other channel. **⚠⚠DANGER** **HAZARD OF ELECTRIC SHOCK, EXPLOSION, OR ARC FLASH** Although the module can withstand a maximum of 600 VAC applied for one minute between any channel, DO NOT apply voltages beyond the published input ranges. The channels are NOT intended for permanent connection to hazardous voltage circuits. Understand that connection of these channels to voltages greater than 30 VAC or 60 VDC violates electrical safety code requirements and may expose users to electric shock. **Failure to follow these instructions will result in death or serious injury.**
Communication	Communicates with its associated FCM or FCP via the redundant 2 Mbps module Fieldbus.

Power Requirements	• Input Voltage Range (Redundant): 24 VDC +5%, -10% • Consumption (Maximum): 9.4 W • Heat Dissipation (Maximum): 6.8 W
Calibration Requirements	Calibration of the module and termination assembly (TA) is not required.
Regulatory Compliance, Electromagnetic Compatibility (EMC)	*European EMC Directive 2004/108/EC (Prior to April 20, 2016) and 2014/30/EU (Beginning April 20, 2016)*: Meets: EN61326-1:2013 Class A Emissions and Industrial Immunity Levels
Regulatory Compliance, Product Safety	• *Underwriters Laboratories (UL) for U.S. and Canada*: UL/UL-C listed as suitable for use in UL/UL-C listed Class I, Groups A-D; Division 2; temperature code T4 enclosure based systems when connected to specified Foxboro DCS processor modules. Communications circuits also meet the requirements for Class 2 as defined in Article 725 of the National Electrical Code (NFPA No.70) and Section 16 of the Canadian Electrical Code (CSA C22.1). For more information, see the *Standard and Compact 200 Series Subsystem User's Guide* (B0400FA). • *European Low Voltage Directive 2006/95/EC (Prior to April 20, 2016) and 2014/35/EU (Beginning April 20, 2016) and Explosive Atmospheres (ATEX) directive 94/9/EC (Prior to April 20, 2016) and 2014/34/EU (Beginning April 20, 2016)*: DEMKO certified as Ex nA IIC T4 for use in certified Zone 2 enclosure when connected to specified processor modules as described in the *Standard and Compact 200 Series Subsystem User's Guide* (B0400FA).
IECEx Certification	IECEx Certified
(a) For intrinsically safe installations, an external barrier is required.	

Input/Output Channels Specifications

Input Ranges	• Voltage: -0.2564 to 10 VDC or -0.1282 to 5 VDC (0.0 V = 1,600 raw counts) • Current: 0 to 20 mA DC • Pulse Count: 0 to 65,535 with rollover to zero • Frequency: 10 Hz to 25,000 Hz
Input Over-Range Capability	• Voltage: 10.2 VDC or 5.1 VDC (65,535 counts) 30 V without damage

	• Current: 20.4 mA DC (65,280 counts) 36 mA without damage
Digital SOE or Pulse on Level	• Voltage: 6 VDC min, 30 VDC max • Current: 2.1 mA DC min, 10 mA DC max. NAMUR compatible
Digital SOE or Pulse Off Level	• Voltage: 0 VDC min, 2 VDC max • Current: 0 mA DC min, 1.2 mA DC max. NAMUR compatible
Minimum Pulse On Time	16 microseconds
Minimum Pulse Off Time	16 microseconds
Minimum Pulse Period	40 microseconds
Input Accuracy	• Analog Input: 0.03% of span • Temperature Coefficient: 50 PPM/°C • Pulse Rate: 0.05% of reading
Input Pulse Totalizing	No missing pulses
Analog Input Resolution	16 bits
Pulse Count Resolution	• Pulse Count: 16 bits (integer) • Frequency: 32 bits (integer)

Input Update Rate	• Analog: 25 milliseconds, unsettled raw samples are available at an update rate of 10 milliseconds as inputs to the Foxboro Transient Data Recorder (TDR) • Pulse Count and Frequency: 10 or 25 milliseconds depending upon integration time setting • Digital SOE Update Rate: 1 millisecond
Analog and Pulse Input Integration Time	100, 200, 500, and 1,000 milliseconds, software configurable on a per FBM basis
Fastest Allowed ECB Block Period	100 millisecond
Input Signal A/D Conversion	Each channel performs A/D signal conversion using an independent Sigma-Delta converter.
Input Channel Impedance	• Voltage Input: 10 M nominal • Current Input: ◦ With External Loop Supply: 200 Ω nominal ◦ With Internal Loop Supply: 250 Ω nominal
Input Current Limit	30 mA nominal
Maximum Output Current	20.4 mA
Maximum Output Load in Output Mode when FBM Provides Power	750 Ω when using FBM power
Analog Output Accuracy	0.05% of span (0.1 to 20 mA) Temperature Coefficient: 50 PPM/°C
Analog Output Resolution	13 bits
Analog Output Non-Linearity	Non-linearity is included in the accuracy specification.
Analog Output Processing Delay	30 milliseconds maximum
Field Device Cabling Distance	For current I/O Channels, maximum distance of the field device from the FBM is a function of compliance voltage (20 VDC @ 20.4 mA input), wire gauge, and voltage required at the field device.
Loop Power Supply Protection	Loop power is channel-to-channel galvanically isolated and current limited.
HART® Protocol Compatibility	The channels meet the impedance requirements for a HART high Impedance Device and can be used in a HART loop without interfering with the HART signals between the field device and a Hand-Held Communicator (HHC).

Environmental Specifications

	Operating	Storage
Temperature	• Module : -20 to +70°C (-4 to +158°F) • Termination Assembly: Polyamide (PA): -20 to +70°C (-4 to +158°F)	-40 to +70°C (-40 to +158°F)
Relative Humidity	5 to 95% (noncondensing)	5 to 95% (noncondensing)
Altitude	-300 to +3,000 m (-1,000 to +10,000 ft)	-300 to +12,000 m (-1,000 to +40,000 ft)
Contamination	Suitable for use in Class G3 (Harsh) environments as defined in ISA Standard S71.04, based on exposure testing according to EIA Standard 364-65, Class III.	
Vibration	0.75g from 5 to 500 Hz	

Physical Specifications

	Module	Termination Assembly
Mounting	FBM247 mounts on a 200 Series baseplate. The baseplate can be mounted on a DIN rail (horizontally or vertically), or horizontally on a 19-inch rack using a mounting kit. See *Standard 200 Series Baseplates* (PSS 41H-2SBASPLT) for details.	The DIN rail mounted termination assembly (TA) mounts on a DIN rail and accommodates multiple DIN rail styles including 32 mm (1.26 in) and 35 mm (1.38 in). The baseplate-mounted TA (RH101KA) mounts on the field I/O connector associated with its FBM247 on a 200 Series baseplate. The baseplate-mounted TA (RH924WG) mounts on the two field I/O connectors associated with its two FBM247s on a 200 Series baseplate.
Weight	373 g (12 oz) approximate	• DIN Rail Mounted TA: 170 g (0.37 lb, approximate) • Baseplate-Mounted TA: 245 g (0.57 lb, approximate)
Dimensions	• Height: 102 mm (4 in), 114 mm (4.5 in) including mounting lugs • Width: 45 mm (1.75 in) • Depth: 104 mm (4.11 in)	See Dimensions - Nominal, page 18
Part Numbers	RH927BN	See Functional Specifications - Termination Assemblies, page 16
Termination Cables	• Cable Lengths: Up to 30 m (98 ft) • Cable Materials: Polyurethane or Low Smoke Zero Halogen • Termination Cable Type: Type 1 – See Table 2, page 17	

Cable Connection — TA to Baseplate	FBM Baseplate End: • 37-pin D-subminiature	Termination Assembly End: • 25-pin D-subminiature
Field Termination Connections	DIN Rail TA Compression — Type Accepted Wiring Sizes: • Solid/Stranded/AWG: 0.2 to 4 ^{2}/0.2 to 2.5 ^{2}/24 to 12 AWG • Stranded with Ferrules: 0.2 to 2.5 ^{2} with or without plastic collar Baseplate Mounted TA Compression — Accepted Wiring Sizes: • Solid/Stranded/AWG: 0.2 to 1.5 ^{2}/0.2 to 1.5 ^{2}/24 to 16 AWG • Stranded with Ferrules: 0.25 to 0.75 mm^2 with plastic collar 0.25 to 1.5 mm^2 without plastic collar	

Termination Assemblies and Cables

Field I/O signals connect to the FBM subsystem via a DIN rail mounted termination assembly (TA) or baseplate mounted termination assembly (BTA).

The DIN rail mounted TAs for the FBM247 are available in Polyamide (PA) material with compression screw terminations.

The Compression baseplate mounted TA (RH101KA) for individual FBM247s is available in Acrylonitrile Butadiene Styrene (ABS) material with spring cage screw terminations.

The Spring Cage baseplate mounted TA (RH924WG) for side-by-side mounted FBM247s receiving the same inputs is available in Polycarbonate/Acrylonitrile Butadiene Styrene (PC/ABS) material with compression screw terminations.

See Functional Specifications - Termination Assemblies, page 16 for the TAs used with the FBM247.

The FBM247 provides sufficient loop resistance to allow use of the HART Hand-Held Terminal, or PC20 Intelligent Field Device Configurator (PSS 2A-1Z3 E).

A removable termination cable connects the DIN rail mounted TA to the FBM via a field connector on the baseplate in which the FBM is installed. Termination cables are available in the following materials:

- Polyurethane
- Low Smoke Zero Halogen (LSZH)

Termination cables are available in a variety of lengths, up to 30 meters (98 feet), allowing the TA to be mounted in either the enclosure or in an adjacent enclosure. See Table 2, page 17 for a list of termination cables used with the TAs for the FBM247.

Functional Specifications - Termination Assemblies

FBM Type	Input/Output Signal	TA Part Number		Termination Type[c]	TA Cable Type[d]	TA Cert. Type[e]
		PA[a]	PC/ABS[b]			
FBM247	8 configurable I/O channels, voltage or current, analog or digital. Analog 4 to 20 mA I/O may also have the HART signal superimposed.	RH924WW		C	1	1, 2
FBM247	8 configurable I/O channels, voltage or current, analog or digital. Analog 4 to 20 mA I/O may also have the HART signal superimposed.		RH101KA	Spring Cage (SC) (Baseplate-mounted)	n/a	1, 2
FBM247	Two sets of 8 configurable I/O channels, voltage or current, analog or digital. Analog 4 to 20 mA I/O may also have the HART signal superimposed.		RH924WG	C (Baseplate-mounted)	n/a	1, 2

(a) PA is Polyamide rated from -20 to +70°C (-4 to +158°F).

(b) ABS is Acrylonitrile Butadiene Styrene (PC/ABS) rated from -20 to +70°C (-4 to +158°F).

(c) C = Termination Assembly (TA) with compression terminals, SC = TA with spring cage terminals.

(d) See Table 2, page 17 for cable part numbers and specifications.

(e) See Table 1, page 17 for TA certification definitions.

Table 1 - Certification for Termination Assembly

Type	Certification[a]
Type 1	TAs are UL/UL-C listed as suitable for use in Class I; Groups A-D; Division 2 temperature code T4 hazardous locations. They are DEMKO certified Ex nA IIC T4 Gc for use in Zone 2 potentially explosive atmospheres.
Type 2	TAs are UL/UL-C listed for supplying field circuits Class I; Groups A-D; Division 2 hazardous locations when connected to specified 200 Series FBMs and field circuits meeting entity parameter constraints specified in *Standard and Compact 200 Series Subsystem User's Guide* (B0400FA). They are also DEMKO certified for supplying field circuits for Group IIC, Zone 2 potentially explosive atmospheres. Field circuits are also Class 2 limited energy (60 VDC, 30 VAC, 100 VA or less) if customer-supplied equipment meets Class 2 limits.
Type 4	All field circuits are NEC/CEC Class 2 limited energy if customer-supplied equipment meets Class 2 limits.
(a) All TAs are UL/UL-C listed to comply with applicable ordinary location safety standards for fire and shock hazards. Hazardous location types comply with ATEX directive for II 3 G use. They also comply with the requirements of the European Low Voltage Directive. All listings/certifications require installation and use within the constraints specified in *Standard and Compact 200 Series Subsystem User's Guide* (B0400FA) and the conditions stated in UL and DEMKO reports.	

Table 2 - Cables Types and Part Numbers

Cable Length m (ft)	Type 1 P/PVC[a]	Type 1 LSZH[b]
0.5 (1.6)	RH916DA	RH928AA
1.0 (3.2)	RH916DB	RH928AB
2.0 (6.6)	RH931RM	RH928AC
3.0 (9.8)	RH916DC	RH928AD
5.0 (16.4)	RH916DD	RH928AE
10.0 (32.8)	RH916DE	RH928AF
15.0 (49.2)	RH916DF	RH928AG
20.0 (65.6)	RH916DG	RH928AH
25.0 (82.0)	RH916DH	RH928AJ
30.0 (98.4)	RH916DJ	RH928AK

(a) P/PVC is polyurethane outer jacket and semi-rigid PVC primary conductor insulation. Temperature range: -20 to +70°C (-4 to +158°F).

(b) Low smoke zero halogen or low smoke free of halogen (LSZH) is a material classification used for cable jacketing. LSZH is composed of thermoplastic or thermoset compounds that emit limited smoke and no halogen when exposed to high sources of heat. Temperature range: -40 to +105°C (-40 to +221°F).

Dimensions - Nominal

Figure 3 - DIN-Rail Mounted Termination Assembly

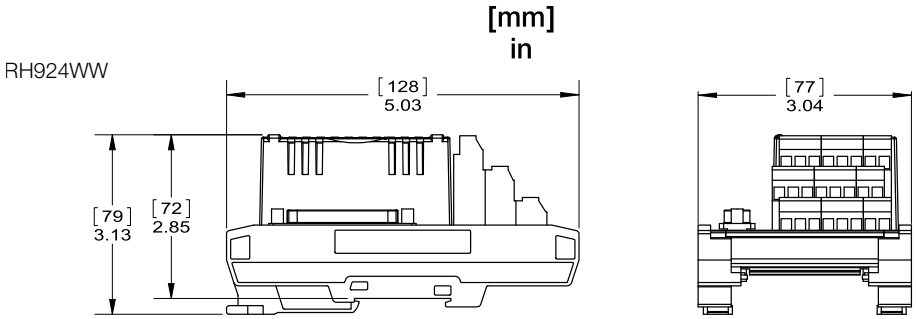

Figure 4 - Baseplate Mounted Termination Assemblies

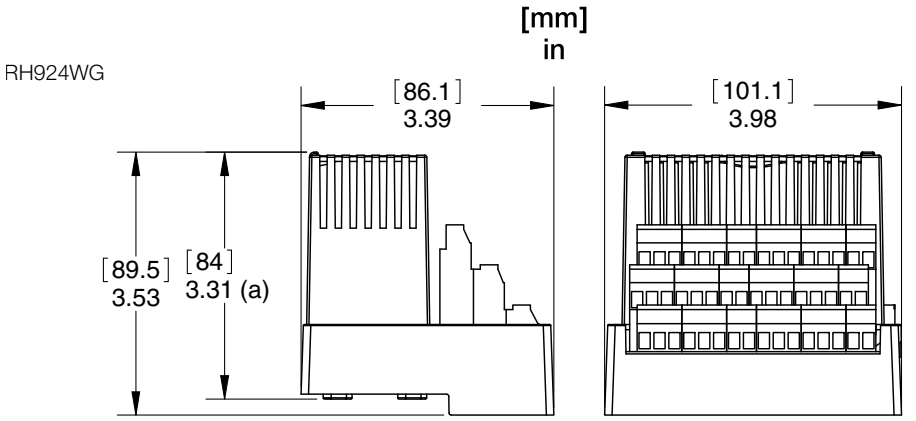

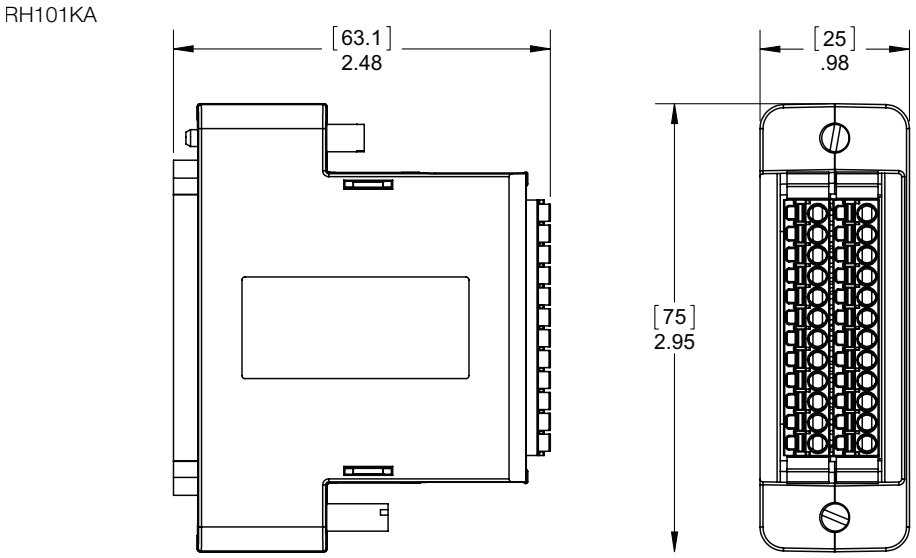

(a) Overall width – for determining DIN rail loading.

(b) Height above DIN rail (add to DIN rail height for total).

Related Documents

Document Number	Description
PSS 41H-2SOV	*Standard 200 Series Subsystem Overview*
B0400FA	*Standard and Compact 200 Series Subsystem User's Guide*
PSS 41H-2CERTS	*Standard and Compact 200 Series I/O - Agency Certifications*
PSS 41H-2SBASPLT	*Standard 200 Series Baseplates*
PSS 41H-2KOV	*K-Series Enclosures Overview*
PSS 41H-4TIMESNC	*Time Synchronization Equipment*
PSS 31S-2SOE	*Sequence of Events*
PSS 31S-2TDRA	*Transient Data Recorder and Analyzer*
PSS 41S-3FCPICS	*Field Control Processor 280 (FCP280) Integrated Control Software*
PSS 41S-10FDMHRT	*Field Device Expert for HART Devices Control and I/O*
PSS 2A-1Z3 G	*Model PC50 Field Device Tool for Use with Intelligent Field Devices*

Proposition 65

WARNING: This product can expose you to chemicals including lead and lead compounds, which are known to the State of California to cause cancer and birth defects or other reproductive harm. For more information go to www.P65Warnings.ca.gov.

Schneider Electric Systems USA, Inc.
70 Mechanic Street
Foxboro, Massachusetts 02035–2040
United States of America

Global Customer Support: https://pasupport.se.com

As standards, specifications, and design change from time to time, please ask for confirmation of the information given in this publication.

© 2015–2025 Schneider Electric. All rights reserved.

PSS 41H-2S247, Rev C