Foxboro™ DCS

FBM245, 0 to 20 mA I/O Module with HART® Support (Redundant)

PSS 41H-2S245

Product Specification

May 2025



https://www.se.com

Legal Information

The information provided in this document contains general descriptions, technical characteristics and/or recommendations related to products/solutions.

This document is not intended as a substitute for a detailed study or operational and site-specific development or schematic plan. It is not to be used for determining suitability or reliability of the products/solutions for specific user applications. It is the duty of any such user to perform or have any professional expert of its choice (integrator, specifier or the like) perform the appropriate and comprehensive risk analysis, evaluation and testing of the products/solutions with respect to the relevant specific application or use thereof.

The Schneider Electric brand and any trademarks of Schneider Electric SE and its subsidiaries referred to in this document are the property of Schneider Electric SE or its subsidiaries. All other brands may be trademarks of their respective owner.

This document and its content are protected under applicable copyright laws and provided for informative use only. No part of this document may be reproduced or transmitted in any form or by any means (electronic, mechanical, photocopying, recording, or otherwise), for any purpose, without the prior written permission of Schneider Electric.

Schneider Electric does not grant any right or license for commercial use of the document or its content, except for a non-exclusive and personal license to consult it on an "as is" basis.

Schneider Electric reserves the right to make changes or updates with respect to or in the content of this document or the format thereof, at any time without notice.

To the extent permitted by applicable law, no responsibility or liability is assumed by Schneider Electric and its subsidiaries for any errors or omissions in the informational content of this document, as well as any non-intended use or misuse of the content thereof.

Overview

A redundant pair of FBM245 modules perform the signal conversion required to interface electrical input/output signals from field sensors and actuators to the redundant module Fieldbus. Each module contains four 0 to 20 mA galvanically isolated analog input and output channels (eight total). They support any mix of standard 4 to 20 mA devices and HART devices up to the limits of loop resistance, as shown in Figure 1.

Each input channel accepts an analog sensor input such as a 4 to 20 mA transmitter or a self-powered 20 mA source. Each output channel drives an external load and produces a 0 to 20 mA output.

A redundant analog input block and redundant analog output block in the Foxboro™ DCS Control Software validates each input and output in conjunction with information to or from the module. When a failure is detected in an FBM245, its output is driven to 0 mA, and the corresponding channel in the good module automatically continues supplying the proper current to the output current loop.

Figure 1 - Redundant I/O Configurations

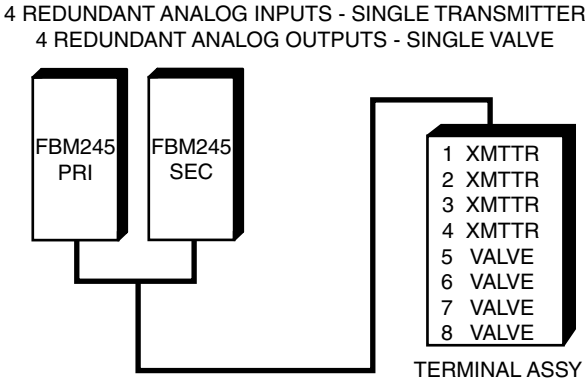

The configurable options for this program include Fail-Safe Action (Hold/Fallback), Analog Output Fail-Safe Fallback Data (on a per channel basis), Fieldbus Fail-Safe Enable, and Fieldbus Fail-Safe Delay Time.

Features

- Four 0 to 20 mA analog input channels, used for a HART analog sensor input
- Four analog output channels, used to drive an external load and produce a 0 to 20 mA output
- Support for the HART universal commands necessary to interface the field device with Foxboro DCS. All channels are galvanically isolated.
- Rugged design suitable for enclosure in harsh environments (Class G3) per ISA Standard S71.04.
- Termination Assemblies (TAs) for locally or remotely connecting field wiring to the FBM245
- Channels may be powered from sources internal to Foxboro DCS or from external sources

Physical Design

The FBM245 has a modular design, with a rugged extruded aluminum exterior for physical protection of the circuits. Enclosures specially designed for mounting the Fieldbus Modules (FBMs) provide various levels of environmental protection, up to harsh environments per ISA Standard S71.04.

Easy Removal/Replacement

The modules can be removed or replaced without removing field device termination cabling or power or communications cabling.

Visual Indicators

Light-emitting diodes (LEDs) incorporated into the front of the modules provide visual status indications of FBM functions.

Modular Baseplate Mounting

The modules mount on a modular baseplate which accommodates up to eight FBMs. The modular baseplate is either DIN rail mounted or rack mounted, and includes signal connectors for redundant fieldbus, redundant independent DC power, and termination cables.

Fieldbus Communication

A Fieldbus Communication Module or a Control Processor interfaces the redundant 2 Mbps module Fieldbus used by the FBMs. The FBM245 module accepts communication from either path (A or B) of the redundant 2 Mbps fieldbus. If one path is unsuccessful or is switched at the system level, the module continues communication over the active path.

Termination Assemblies

Field I/O signals connect to the FBM subsystem via a DIN rail mounted termination assembly (TA). The TA used with the FBM245 modules is described in Termination Assemblies and Cables, page 11.

Functional Specifications

Supported Hart Instrument Types	HART instruments compliant to Version 5, 6, or 7 of the HART specifications may be used.
Process I/O Communications	Communicates with its associated FCM or FCP via the redundant 2 Mbps module Fieldbus.
Input Channels	• Input: 4 isolated and independent redundant channels(1) • Input Range (Each Channel): 0 to 20.4 mA DC • Accuracy: ±0.075% of span • Communication: Via a redundant Fieldbus • Input Connections: Two configurations (see Figure 2)
Output Channels	• Output: 4 isolated and independent redundant channels(2) • Output Range (Each Channel): 0 to 20.4 mA DC • Output Load (Maximum): 735 Ω • Compliance Voltage: 18.0 V nominal at 20 mA DC at I/O field terminals • Accuracy: ±0.05% of span (25°C) between 4-20 mA • Output Temperature Coefficient: 100 ppm/°C • Communication: Via a redundant Fieldbus • Settling Time: 100 ms to settle within a 1% band of steady state for a 10 to 90% input step change • Linearity Error: ±0.05% of span • Resolution: 12 bits
Input Channel Isolation	Each channel is galvanically isolated from all other channels and earth (ground). The module/Termination Assembly (TA) withstands, without damage, a potential of 600 VAC applied for one minute between any channel and ground, or between a given channel and any other channel.

	⚠⚠DANGER **HAZARD OF ELECTRIC SHOCK, EXPLOSION, OR ARC FLASH** Although the module can withstand a maximum of 600 VAC applied for one minute between any channel, DO NOT apply voltages beyond the published input ranges. The channels are NOT intended for permanent connection to hazardous voltage circuits. Understand that connection of these channels to voltages greater than 30 VAC or 60 VDC violates electrical safety code requirements and may expose users to electric shock. **Failure to follow these instructions will result in death or serious injury.**
Fastest Allowed ECB Block Period	100 msec - However, it is recommended that you see the *Sizing Guidelines and Excel Workbook* appropriate for your Control Processor to determine the optimal loading for a 100 msec Block Processing Cycle (BPC).
Calibration Requirements	Calibration of the module and TA is not required.
Power Requirements	• Input Voltage (Redundant): 24 VDC +5%, -10% • Consumption: 7 W (maximum) • Heat Dissipation: 3 W (maximum)
Regulatory Compliance: Electromagnetic Compatibility (EMC):	• *European EMC Directive 2004/108/EC (Prior to April 20, 2016) and 2014/30/EU (Beginning April 20, 2016)*: Meets: EN61326-1:2013 Class A Emissions and Industrial Immunity Levels

Regulatory Compliance: Product Safety	• *Underwriters Laboratories (UL) for U.S. and Canada*: UL/UL-C listed as suitable for use in UL/ULC listed Class I, Groups A-D; Division 2; temperature code T4 enclosure based systems when connected to specified Foxboro DCS processor modules. Communications circuits also meet the requirements for Class 2 as defined in Article 725 of the National Electrical Code (NFPA No.70) and Section 16 of the Canadian Electrical Code (CSA C22.1). For more information, see *Standard and Compact 200 Series Subsystem User's Guide* (B0400FA). • *European Low Voltage Directive 2006/95/EC (Prior to April 20, 2016) and 2014/35/EU (Beginning April 20, 2016) and Explosive Atmospheres (ATEX) directive 94/9/EC (Prior to April 20, 2016) and 2014/34/EU (Beginning April 20, 2016)* DEMKO certified as Ex nA IIC T4 for use in certified Zone 2 enclosure when connected to specified processor modules as described in the *Standard and Compact 200 Series Subsystem User's Guide* (B0400FA). Also, see Table 1.
IECEx Certification	IECEx Certified
RoHS Compliance	Complies with European RoHS Directive 2011/65/EU, including amending Directives 2015/863 and 2017/2102.
(1) Redundant inputs pairs are connected by a common field I/O connector and are not isolated from each other.	
(2) Redundant output pairs are connected by a common field I/O connector and are not isolated from each other.	

Figure 2 - Input Connections

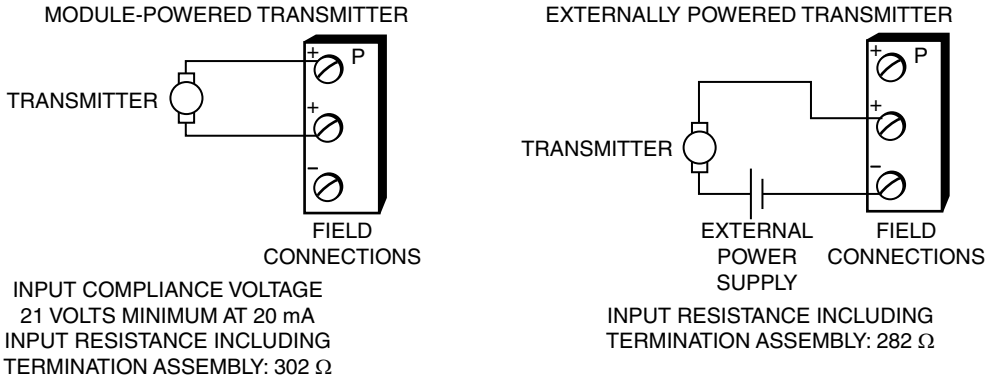

Environmental Specifications

	Operating	Storage
Temperature	• FBM245: -20 to +70°C (-4 to +158°F) • Termination Assembly: -20 to +70°C (-4 to +158°F)	-40 to +70°C (-40 to +158°F)
Relative Humidity	5 to 95% (noncondensing)	5 to 95% (noncondensing)
Altitude	-300 to +3,000 m (-1,000 to +10,000 ft)	-300 to +12,000 m (-1,000 to +40,000 ft)
Vibration	0.75g from 5 to 500 Hz	
Contamination	Suitable for use in Class G3 (Harsh) environments as defined in ISA Standard S71.04, based on exposure testing according to EIA Standard 364-65, Class III.	

NOTE: The environmental limits of this module may be enhanced by the type of enclosure containing the module. See the applicable Product Specification Sheet (PSS) that describes the specific type of enclosure that is to be used.

Physical Specifications

Mounting	• FBM245: The modules mount on a modular baseplate. The baseplate can be mounted on a DIN rail (horizontally or vertically), or horizontally on a 19-inch rack using a mounting kit. See *Standard 200 Series Baseplates* (PSS 41H-2SBASPLT) for details. • Termination Assembly (TA): The TA mounts on a DIN rail and accommodates multiple DIN rail styles including 32 mm (1.26 in) and 35 mm (1.38 in).
Weight	• FBM245: 284 g (10 oz) approximate • Termination Assembly: 181 g (0.40 lb) approximate
Dimensions - FBM245	• Height: 102 mm (4 in), 114 mm (4.5 in) including mounting lugs • Width: 45 mm (1.75 in) • Depth: 104 mm (4.11 in)
Dimensions - Termination Assemblies	See Dimensions - Nominal, page 14.
Part Numbers	• FBM245: RH927AL • Termination Assemblies: See Functional Specifications - Termination Assemblies, page 12 • Redundant Adapter: RH924DU

Termination Cables	• Cable Lengths: Up to 30 m (98 ft) • Cable Materials: Polyurethane or Low Smoke Zero Halogen (LSZH) • Termination Cable Type: Type 1 - See Table 2 • Cable Connection: ◦ FBM Baseplate End: 37-pin D-subminiature ◦ Termination Assembly End: 25-pin D-subminiature
Termination Assembly Construction Material	Polyamide (PA), compression
Field Termination Connections	• Compression-Type Accepted Wiring Sizes: ◦ Solid/Stranded/AWG: 0.2 to 4 mm^2/0.2 to 2.5 mm^2/24 to 12 AWG ◦ Stranded with Ferrules: 0.2 to 2.5 mm^2 with or without plastic collar

Termination Assemblies and Cables

Field input signals connect to the FBM subsystem via DIN rail mounted Termination Assemblies (TAs).

The redundant adapter connects the redundant FBMs baseplate input/output connectors together. The redundant adapter provides a single termination connection to a single TA.

The TA for the FBM245 module is available as a compression screw type using Polyamide (PA) material.

See Functional Specifications - Termination Assemblies, page 12 for the TA used with the FBM245 modules.

The DIN rail mounted TAs connect to the redundant adapter by means of a removable termination cable. The cable is available in a variety of lengths, up to 30 meters (98 feet), allowing the TA to be mounted in either the enclosure or in an adjacent enclosure.

Termination cables are available in the following materials:

- Polyurethane
- Low Smoke Zero Halogen (LSZH)

See Table 2 for a list of termination cables used with the TA for the FBM245 modules.

Functional Specifications - Termination Assemblies

FBM Type	Input Signal	TA Part Number[a]	Termination Type[b]	TA Cable Type[c]	TA Cert. Type[d]
		PA			
FBM245	Four input and four output channels, 4 to 20 mA analog signal, from HART devices	RH924QU (supersedes P0924QU) RH924QZ[e] (superse-desP0924QZ) P0916AJ (Legacy) P0916AK (Legacy) RH916XL P0917JP RH917QW	C	1	1, 2

(a) PA is polyamide rated from -20 to +70°C (-4 to +158°F).

(b) C = Termination Assembly (TA) with compression terminals.

(c) See Table 2, page 13 for cable part numbers and specifications.

(d) See Table 1, page 12 for TA certification definitions.

(e) RH924QZ (supersedes P0924QZ) has four output bypass jacks. It is not suitable for use in any hazardous locations - ordinary locations only.

Table 1 - Certification for Termination Assemblies

Type	Certification[a]
Type 1	TAs are UL/UL-C listed as suitable for use in Class I; Groups A-D; Division 2 temperature code T4 hazardous locations. They are DEMKO certified EEx nA [nL] IIC T4 for use in Zone 2 potentially explosive atmospheres.
Type 2	TAs are UL/UL-C listed as associated apparatus for supplying non-incendive field circuits Class I; Groups A-D; Division 2 hazardous locations when connected to specified 200 Series FBMs and field circuits meeting entity parameter constraints specified in *Standard and Compact 200 Series Subsystem User's Guide* (B0400FA). They are also DEMKO certified as associated apparatus for supplying field circuits for Group IIC, Zone 2 potentially explosive atmospheres. Field circuits are also Class 2 limited energy (60 VDC, 30 VAC, 100 VA or less) if customer-supplied equipment meets Class 2 limits.

(a) All TAs are UL/UL-C listed to comply with applicable ordinary location safety standards for fire and shock hazards. Hazardous location types comply with ATEX directive for II 3 G use. They also comply with the requirements of the European Low Voltage Directive. All listings/certifications require installation and use within the constraints specified in *Standard and Compact 200 Series Subsystem User's Guide* (B0400FA) and the conditions stated in UL and DEMKO reports.

Table 2 - Cable Types and Part Numbers

Cable Length m (ft)	Type 1 P/PVC[a]	Type 1 LSZH[b]
0.5 (1.6)	RH916DA	RH928AA
1.0 (3.2)	RH916DB	RH928AB
2.0 (6.6)	RH931RM	RH928AC
3.0 (9.8)	RH916DC	RH928AD
5.0 (16.4)	RH916DD	RH928AE
10.0 (32.8)	RH916DE	RH928AF
15.0 (49.2)	RH916DF	RH928AG
20.0 (65.6)	RH916DG	RH928AH
25.0 (82.0)	RH916DH	RH928AJ
30.0 (98.4)	RH916DJ	RH928AK

(a) P/PVC is polyurethane outer jacket and semi-rigid PVC primary conductor insulation. Temperature range: -20 to +80°C (-4 to +176°F).

(b) Low smoke zero halogen or low smoke free of halogen (LSZH) is a material classification used for cable jacketing. LSZH is composed of thermoplastic or thermoset compounds that emit limited smoke and no halogen when exposed to high sources of heat. Temperature range: -40 to +105°C (-40 to +221°F).

Use of Termination Assemblies in 100 Series Upgrade

When a redundant FBM245 is used to replace the 100 Series FBM05, it may use any of the appropriate termination assemblies listed above for the FBM245's field I/O wiring.

Dimensions - Nominal

Figure 3 - Termination Assembly (Compression) RH924QU, RH924QZ

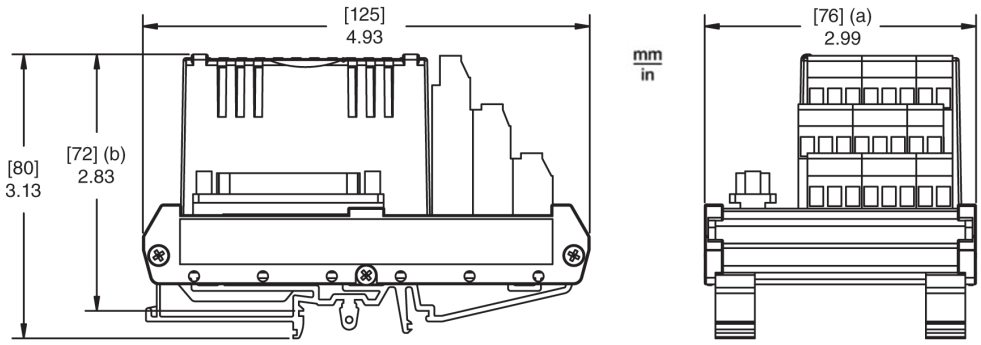

(a) Overall width — for determining DIN rail loading.

(b) Height above DIN rail (add to DIN rail height for total).

Related Documents

Document Number	Description
PSS 41H-2SOV	*Standard 200 Series Subsystem Overview*
B0400FA	*Standard and Compact 200 Series Subsystem User's Guide*
PSS 41H-2W100	*100 Series Fieldbus Module Upgrade Subsystem Overview*
PSS 41H-2CERTS	*Standard and Compact 200 Series I/O - Agency Certifications*
PSS 41H-2SBASPLT	*Standard 200 Series Baseplates*
PSS 41S-3FCPICS	*Field Control Processor 280 (FCP280) Integrated Control Software*

Proposition 65

WARNING: This product can expose you to chemicals including lead and lead compounds, which are known to the State of California to cause cancer and birth defects or other reproductive harm. For more information go to www.P65Warnings.ca.gov.

Schneider Electric Systems USA, Inc.
70 Mechanic Street
Foxboro, Massachusetts 02035–2040
United States of America

Global Customer Support: https://pasupport.se.com

As standards, specifications, and design change from time to time, please ask for confirmation of the information given in this publication.

© 2015–2025 Schneider Electric. All rights reserved.

PSS 41H-2S245, Rev B