Foxboro™ DCS

FBM219 Discrete I/O Interface Module

PSS 41H-2S219

Product Specification

May 2025



https://www.se.com

Legal Information

The information provided in this document contains general descriptions, technical characteristics and/or recommendations related to products/solutions.

This document is not intended as a substitute for a detailed study or operational and site-specific development or schematic plan. It is not to be used for determining suitability or reliability of the products/solutions for specific user applications. It is the duty of any such user to perform or have any professional expert of its choice (integrator, specifier or the like) perform the appropriate and comprehensive risk analysis, evaluation and testing of the products/solutions with respect to the relevant specific application or use thereof.

The Schneider Electric brand and any trademarks of Schneider Electric SE and its subsidiaries referred to in this document are the property of Schneider Electric SE or its subsidiaries. All other brands may be trademarks of their respective owner.

This document and its content are protected under applicable copyright laws and provided for informative use only. No part of this document may be reproduced or transmitted in any form or by any means (electronic, mechanical, photocopying, recording, or otherwise), for any purpose, without the prior written permission of Schneider Electric.

Schneider Electric does not grant any right or license for commercial use of the document or its content, except for a non-exclusive and personal license to consult it on an "as is" basis.

Schneider Electric reserves the right to make changes or updates with respect to or in the content of this document or the format thereof, at any time without notice.

To the extent permitted by applicable law, no responsibility or liability is assumed by Schneider Electric and its subsidiaries for any errors or omissions in the informational content of this document, as well as any non-intended use or misuse of the content thereof.

Overview

The FBM219 Discrete I/O Module has 24 discrete input channels and 8 discrete output channels. Associated termination assemblies (TAs) support discrete input or output signals at voltages of under 30 VDC, 120 VAC/125 VDC, or 240 VAC.

Depending on the type of I/O signal required, the TAs contain current limiting devices, fuses, relays, or relay outputs with internal or external power source and fusing.

The module with its associated TA supports the following discrete inputs and outputs:

FBM	Inputs	Outputs
FBM219	30 VDC, 125 VDC, 120 VAC, or 240 VAC (voltage monitor or contact sense)	30 VDC at 0.25 A, or 30 VDC at 5 A, or 125 VDC at 0.6 A, or 120 VAC at 5 A, or 240 VAC at 5 A Switch (external or internal power source)

When connected to the appropriate TAs, the FBM219 module provides functionality formerly provided by the 100 Series Fieldbus Module (FBM) I/O subsystem.

TAs are available which support the functionality of the 100 Series main FBM07A/B, FBM08, FBM20, and FBM24A/B/C (16 input main FBMs), when these main FBMs are used with expansion FBM14, FBM15, FBM16, FBM27 or FBM42 (8 input/8 output expansion FBMs).

Features

- 24 discrete inputs
- 8 discrete outputs
- Supports discrete input/output signals at voltages of:
  - 15 to 60 VDC
  - 120 VAC/125 VDC
  - 240 VAC
- Each input/output is group isolated
- Rugged design suitable for enclosure in Class G3 (harsh) environments
- Executes the Discrete I/O or Ladder Logic program, with the following configurable options: Input Filter Time, Fail Safe Configuration, Fail-Safe Fall-Back, and Sustained or Momentary Outputs
- Various Termination Assemblies (TAs) that contain high voltage attenuation and optical isolation for inputs

Standard Design

The module has a rugged extruded aluminum exterior for physical protection of the circuits. Enclosures specially designed for mounting the FBMs provide various levels of environmental protection, up to harsh environments, per ISA Standard S71.04.

Visual Indicators

Light-emitting diodes (LEDs) incorporated into the front of the module provide visual indication of the FBM operational status, as well as the discrete states of the individual input and output points.

Easy Removal/Replacement

The module can be removed/replaced without removing field device termination cabling, power, or communication cabling.

Fieldbus Communication

A Fieldbus Communications Module or a Control Processor interfaces to the redundant 2 Mbps module Fieldbus used by the FBMs. The FBM219 accepts communication from either path (A or B) of the 2 Mbps Fieldbus. If one path is unsuccessful or is switched at the system level, the module continues communication over the active path.

Modular Baseplate Mounting

The module mounts on a DIN rail mounted baseplate, which accommodates up to four or up to eight FBMs. The Modular Baseplate is either DIN rail mounted or rack mounted, and includes signal connectors for redundant Module Fieldbus, redundant independent DC power, and termination cables.

Security

Field power for contacts or solid state switches is current limited.

Termination Assemblies

Field I/O signals connect to the FBM subsystem via DIN rail mounted TAs. The TAs used with the FBM219 are described in Termination Assemblies and Cables, page 10.

Functional Specifications

Input/Output Channels	24 input and 8 output group isolated channels[a]
Filter/Debounce Time[b]	Configurable (No Filtering, 4, 8, 16, or 32 ms)
Voltage Monitor Function (FBM219)	Input: • On-State Voltage: 15 to 30 VDC • Off-State Voltage: 0 to 5 VDC • Current: 2.2 mA (typical) at 30 VDC Input Source Resistance Limits: • On-State: 1 kΩ (maximum) at 15 VDC • Off-State: 100 kΩ (minimum) at 30 VDC
Output Switch with External Source (FBM219)	• Applied Voltage: 60 VDC (maximum) • Load Current: 0.25 A (maximum) • Off-State Leakage Current: 0.25 mA (maximum)
Inductive Loads	Module output may require a protective diode or metal oxide varistor (MOV) connected across the inductive load.
Isolation	For TAs which provide input and output group isolation (listed in Functional Specifications - Main Termination Assemblies, page 13), input and output groups are group isolated from earth (ground). For details, see *Standard and Compact 200 Series Subsystem User's Guide* (B0400FA). The module/TA withstands, without damage, a potential of 600 VAC applied for one minute between any channel and ground, or between any input channel and any output channel. For TAs RH917LL (supersedes P0917LL) and RH917LP (supersedes P0917LP) (which provide input channel isolation) and TA RH917LS (supersedes P0917LS) (which provides output channel isolation), each channel is galvanically isolated from all other channels and earth (ground). The module/TA withstands, without damage, a potential of 600 VAC applied for one minute between any channel and ground, or between a given channel and any other channel. **⚠⚠DANGER** **HAZARD OF ELECTRIC SHOCK, EXPLOSION, OR ARC FLASH** Although the module can withstand a maximum of 600 VAC applied for one minute between any channel, DO NOT apply voltages beyond the published input ranges. The channels are NOT intended for permanent connection to hazardous voltage circuits. Understand that connection of these channels to voltages greater than 30 VAC or 60 VDC violates electrical safety code requirements and may expose users to electric shock. **Failure to follow these instructions will result in death or serious injury.**

Communication	Communicates with its associated FCM or FCP via the module Fieldbus.
Power Requirements	• Input Voltage Range (Redundant): 24 VDC +5%, -10% • Consumption: 6 W (maximum) at 24 VDC • Heat Dissipation: 5 W (maximum) at 24 VDC
Loop Power Supply Protection	Current limited to 2.5 mA for inputs.
Calibration Requirements	Calibration of the module and termination assembly is not required.
Regulatory Compliance: Electromagnetic Compatibility (EMC)	• *European EMC Directive 2014/30/EU*: EN 61326:2013 Class A Emissions and Industrial Immunity levels
Regulatory Compliance: Product Safety	• *Underwriters Laboratories (UL) for U.S. and Canada*: UL/UL-C listed as suitable for use in UL/UL-C listed Class I, Groups A-D; Division 2; temperature code T4 enclosure based systems when connected to specified Foxboro DCS processor modules. Communications circuits also meet the requirements for Class 2 as defined in Article 725 of the National Electrical Code (NFPA No.70) and Section 16 of the Canadian Electrical Code (CSA C22.1). For more information, see *Standard and Compact 200 Series Subsystem User's Guide* (B0400FA). • *European Low Voltage Directive 2014/35/EU and Explosive Atmospheres (ATEX) directive 2014/34/EU* DEMKO certified as Ex nA IIC T4 for use in certified Zone 2 enclosure when connected to specified processor modules as described in the *Standard and Compact 200 Series Subsystem User's Guide* (B0400FA).
RoHS Compliance	Complies with European RoHS Directive 2011/65/EU, including amending Directives 2015/863 and 2017/2102.
IECEx Certification	IECEx Certified
(a) Termination Assemblies RH917LL and RH917LP provide input channel isolation for this FBM and Termination Assembly RH917LS provides output channel isolation for this FBM. (b) Digital filtering available for 200 Series FBM or competitive migration modules with version 1.25H or later firmware.	

Environmental Specifications

	Operating	Storage
Temperature	• FBM219: -20 to + 70°C (-4 to +158°F) • Termination Assembly – PA: -20 to +70°C (-4 to +158°F)	-40 to +70°C (-40 to +158°F)
Relative Humidity	5 to 95% (noncondensing)	5 to 95% (noncondensing)
Altitude	-300 to +3,000 m (-1,000 to +10,000 ft)	-300 to +12,000 m (-1,000 to +40,000 ft)
Vibration	0.75g (5 to 500 Hz)	
Contamination	Suitable for use in Class G3 (Harsh) environments as defined in ISA Standard S71.04, based on exposure testing according to EIA Standard 364-65, Class III.	

Physical Specifications

Mounting	• Module: FBM219 mounts on a baseplate or on a 100 Series conversion mounting structure. The baseplate can be mounted on a DIN rail (horizontally or vertically), or horizontally on a 19-inch rack using a mounting kit. Alternative, this FBM mounts on a 100 Series conversion mounting structure. For more information, see *EcoStruxure™ Foxboro™ DCS Standard 200 Series Baseplates* (PSS 41H-2SBASPLT) or *EcoStruxure™ Foxboro™ DCS 100 Series Conversion Mounting Structures* (PSS 41H-2W8). • Termination Assembly: The TA mounts on a DIN rail and accommodates multiple DIN rail styles including 32 mm (1.26 in) and 35 mm 1.38 in).
Weight	• Module: 284 g (10 oz) approximate • Termination Assemblies — Compression: ◦ 216 mm (8.51 in) – 420 g (0.93 lb, approximate) ◦ 267 mm (10.52 in) – 480 g (1.1 lb, approximate) ◦ 286 mm (11.25 in) – 908 g (2.0 lb, approximate)
Dimensions - Module	• Height: 102 mm (4 in),114 mm (4.5 in) including mounting lugs • Width: 45 mm (1.75 in) • Depth: 104 mm (4.11 in)
Dimensions - Termination Assemblies	See Dimensions - Nominal, page 24
Part Numbers	• FBM219: RH916RH • Termination Assemblies: See Functional Specifications - Main Termination Assemblies, page 13

Termination Cables	• Cable Lengths: Up to 30 m (98 ft) • Cable Materials: Polyurethane or Low Smoke Zero Halogen (LSZH) • Termination Cable Type: ◦ Baseplate to Main TA: Type 4 - See Table 2, page 22 ◦ Main TA to Expansion TA: Type 6 - See Table 3, page 23 • Cable Connection: ◦ FBM Baseplate End: 37-pin D-subminiature ◦ Termination Assembly End: 25-pin D-subminiature
Termination Assembly Construction	• Material: Polyamide (PA), compression
Field Termination Connections	• Compression-Type Accepted Wiring Sizes: ◦ Solid/Stranded/AWG: 0.2 to 4 mm^2/0.2 to 2.5 mm^2/24 to 12 AWG ◦ Stranded with Ferrules: 0.2 to 2.5 mm^2 with or without plastic collar
Termination Assembly Switching Relays	• Electrical Service Life: 100,000 operations at rated resistive load 5,000,000 operations at no load • 5 A Relay: ◦ Type: Single-Pole, Double-Throw, Normally Open (SPDT_NO) ◦ Switching Current: 5 A at up to 120 VAC See General Purpose Plug-In Relay Termination Assembly Specifications, page 27

Termination Assemblies and Cables

Field I/O signals connect to the FBM subsystem via DIN rail mounted termination assemblies (TAs). Multiple types of TAs are available with FBM219 to provide I/O signal connections, signal conditioning, optical isolation from signal surges, external power connections, and/or fusing for protection of the FBM and/or field device as required by the particular FBM. Since these features are built into the termination assemblies (where required), in most applications there is no need for additional termination equipment for field circuit functions such as circuit protection or signal conditioning (including fusing and power distribution).

The DIN rail mounted termination assemblies connect to the FBM subsystem baseplate by means of removable termination cables. The cables are available in a variety of lengths, up to 30 meters (98 feet), allowing the termination assemblies to be mounted in either the enclosure or in an adjacent enclosure. See Functional Specifications - Main Termination Assemblies, page 13 for termination cable part numbers and specifications.

Migration Use of Termination Assemblies

When an FBM219 is used to replace 100 Series FBMs, its associated termination assembly is determined based on which 100 Series FBM is being replaced. Typically, the 100 Series FBM being replaced is a main FBM and is used in conjunction with an expansion FBM.

A single FBM219 provides the I/O communications for both the 100 Series equivalent main and expansion TAs. To provide enough terminals for the field I/O wiring, two termination assemblies are used with the FBM219 - one for the field I/O wiring for the replaced main FBM, and one for the field I/O wiring for the replaced expansion FBM.

The “expansion” termination assembly is daisy-chained to the “main” termination assembly via the expansion cables listed in Table 3, page 23.

The table Functional Specifications - Main Termination Assemblies, page 13 and Functional Specifications - Expansion Termination Assemblies, page 18 list the termination assemblies needed to replace both the 100 Series main FBMs and the expansion FBMs.

Alternatively, the FBM219 can accept field wiring through a Termination Assembly Adapter (TAA) instead of the termination assemblies when replacing 100 Series FBMs. This is discussed in the *Termination Assembly Adapter Modules for 100 Series Upgrade* (PSS 41H-2W4).

The output circuits of termination assemblies used in migration/upgrading use active current limiting for circuit protection.

Discrete Inputs

Terminal assemblies with discrete inputs support twenty-four 2-wire discrete input signals at passive low voltage levels of less than 60 VDC and active high voltage levels of 120 VAC, 125 VDC, 240 VAC. Active termination assemblies support input signal conditioning for FBMs. The I/O signal conditioning circuits are designed to emulate the 100 Series FBM I/O subsystem. This provides for functional I/O equivalence during upgrades from 100 Series to 200 Series hardware. The signal conditioning functionality is built into the termination assembly. To condition signals, these termination assemblies provide optical isolation, current limiting, voltage attenuation and optional terminal blocks to connect externally supplied excitation voltage.

Low Voltage Discrete Inputs

The low voltage inputs (less than 60 VDC) use passive termination assemblies. Inputs can either be voltage monitor, switched or contact sense types. Voltage monitor inputs require an external field voltage source. Contact sense input use the FBM auxiliary +24 VDC power supply to wet field contacts.

A load may not be required for proper operation of the input channels. A diode may be required for a DC inductive load only.

High Voltage Discrete Inputs

The high voltage input circuits support 125 VDC or 120 VAC. Voltage monitor inputs require a field voltage source.

These input circuits are located on daughter boards that are mounted under the component covers of the termination assemblies.

Discrete Outputs

Termination assemblies with discrete outputs support eight 2-wire discrete output signals at passive low voltages of less than 60 VDC and active high voltage levels of 120 VAC, 125 VDC, or 240 VAC. Active termination assemblies support output signal conditioning for FBMs. The signal conditioning functionality is built into the termination assembly. To condition signals, these termination assemblies provide fuse protection, relays and terminal blocks to connect externally supplied optional power distribution.

Low Voltage Discrete Outputs

The low voltage outputs (less than 60 VDC) use passive termination assemblies. These assemblies are available with and without output protection (fusing). Termination assemblies with protection have individual user serviceable fuses that are designed to limit the output current to 2 A. Eight vertically mounted, one per channel, 3.15 A sand filled fuses (temperature derated) allow a maximum of 2 A current per output channel. Termination assemblies without fusing (unprotected) are intended for use by Foxboro engineers or customers who are using interposing relays or fuse terminal blocks between the termination assembly and the field devices.

Power for the low voltage outputs must be supplied as detailed in Functional Specifications - Main Termination Assemblies, page 13 and Functional Specifications - Expansion Termination Assemblies, page 18.

High Voltage Discrete Outputs

Some high voltage output (120 VAC, 125 VDC or 240 VAC) termination assemblies use plug-in SPDT (Form C) electromechanical relays. The plug-in sockets allow field replacement of individual relays. The relays and associated sockets are located under the component covers of the termination assemblies. The termination assembly's switched outputs use unsealed, general purpose relays. These assemblies are capable of providing mixed voltage and are designed to provide signal segregation by locating the low voltage inputs an the opposite side of the terminal assembly from the outputs. High voltage discrete outputs are always externally sourced power.

The relay output termination assemblies come in either output or output with power distribution (user-supplied via terminals on the termination assembly). In both configurations, when the FBM output is on, the relay coil is energized and the relay contact is switched from normally closed (NC) position to the normally open (NO) position. The FBM +24 VDC auxiliary power supply is used to energize the relay coil.

Termination assemblies with power distribution have a dedicated terminal block which provides a connection to externally supplied power and distributed internally on the termination assembly to each of the relay output channels. The line or positive side of the supply is fused; the neutral or negative side of the supply is connected to the field.

The relay termination assembly has a pair of external excitation voltage terminals, which distribute customer-supplied wetting voltage to all input channels on the assembly. These terminals allow the field power to be daisy chained between terminal assemblies.

The new 100 Series equivalent TAs provide solid state output channels. These provide the identical functionality of the original 100 Series FBM circuits.

Functional Specifications - Main Termination Assemblies

TA Part No. PA[a]	Input Signal	Output Signal	Term. Type[b]	BP to TA Cable Type[c]	TA Cert. Type [d]
RH917LP	24 channel, Voltage Monitor, external source 132 VAC or 150 VDC Maximum voltage Logic Zero: 0 to 20 VAC or DC Logic One: 79 to 132 VAC Logic One: 75 to 150 VDC 2.2 mA typical 20 to 150 V 1 kΩ Maximum On-state resistance 100 kΩ Minimum Off-state resistance	8 channel, Output Switch, external source with power distribution SPDT (Form C) Relay:[e] ≤30 VDC: 5 A maximum ≤250 VAC: 5 A maximum Maximum total current per TA: 12 A[f]	C	4	5
RH917LS	24 channel, Contact Sense, external source with power distribution 132 VAC or 150 VDC Maximum voltage Logic Zero: 0 to 20 VAC or DC Logic One: 79 to 132 VAC Logic One: 75 to 150 VDC 2.2 mA typical 20 to 150 V 1 kΩ Maximum On-state resistance 100 kΩ Minimum Off-state resistance	8 channel, Output Switch, external source SPDT (Form C) Relay:[e] ≤30 VDC: 5 A maximum ≤250 VAC: 5 A maximum Maximum total current per TA: 12 A[f]	C	4	5
RH917LV	24 channel, Contact Sense, external source with power distribution 132 VAC or 150 VDC Maximum voltage Logic Zero: 0 to 20 VAC or DC Logic One: 79 to 132 VAC Logic One: 75 to 150 VDC 2.2 mA typical 20 to 150 V 1 kΩ Maximum On-state resistance	8 channel, Output Switch, external source with power distribution SPDT (Form C) Relay:[e] ≤30 VDC: 5 A maximum ≤250 VAC: 5 A maximum Maximum total current per TA: 12 A[f]	C	4	5

TA Part No. PA[a]	Input Signal	Output Signal	Term. Type[b]	BP to TA Cable Type[c]	TA Cert. Type [d]
	100 kΩ Minimum Off-state resistance				
RH917LL	24 channel, Voltage Monitor, external source 132 VAC or 150 VDC Maximum voltage Logic Zero: 0 to 20 VAC or DC Logic One: 79 to 132 VAC Logic One: 75 to 150 VDC 2.2 mA typical 20 to 150 V 1 kΩ Maximum On-state resistance 100 kΩ Minimum Off-state resistance	8 channel, Output Switch, external source SPDT (Form C) Relay:[e] ≤30 VDC: 5 A maximum ≤250 VAC: 5 A maximum Maximum total current per TA: 12 A[f]	C	4	5
RH917LE	24 channel, Voltage Monitor, external source 30 VDC Maximum voltage Logic Zero: 0 to 5 VDC Logic One: 15 to 30 VDC 2.2 mA typical at 30 VDC 1 kΩ Maximum On-state resistance 100 kΩ Minimum Off-state resistance	8 channel, Output Switch, external source 60 VDC Maximum voltage 0.25 A DC Maximum current 0.25 mA DC Maximum off-state leakage current 0.4 A over-current fuse	C	4	1, 2, 4
RH917LH	24 channel, Contact Sense, internal source 24 VDC Nominal open circuit voltage 7 mA DC nominal current limit 2.2 mA typical at 30 VDC 1 kΩ Maximum On-state resistance 100 kΩ Minimum Off-state resistance	8 channel, Output Switch, external source 60 VDC Maximum voltage 0.25 A DC Maximum current 0.25 mA DC Maximum off-state leakage current 0.4 A over-current fuse	C	4	1,2, 4
RH924HA	When replacing a main FBM07A: Voltage Monitor, external source 130 VDC Maximum voltage Logic Zero: 0 to 5 VDC		C	4	1, 2, 4

TA Part No. PA[a]	Input Signal	Output Signal	Term. Type[b]	BP to TA Cable Type[c]	TA Cert. Type [d]
	Logic One: 15 to 130 VDC 2.2 mA typical 5 to 130 VDC 1 kΩ Maximum On-state resistance 100 kΩ Minimum Off-state resistance When replacing a main FBM07B: Contact Sense, internal source 24 VDC ±10% Open circuit voltage 2.5 mA maximum short circuit current 1 kΩ Maximum On-state resistance 100 kΩ Minimum Off-state resistance				
RH924HC	When replacing a main FBM08: 16 channel Voltage Monitor, external source 132 VAC or 150 VDC Logic Zero: 0 to 20 VAC; 0 to 20 VDC Logic One: 79 to 132 VAC; 75 to 150 VDC 2.2 mA typical 20 to 132 VAC 1 kΩ Maximum On-state resistance 100 kΩ Minimum Off-state resistance		C	4	1, 4
RH924HL	When replacing a main FBM20: 16 channel Voltage Monitor, external source 264 VAC Maximum voltage Logic Zero: 0 to 40 VAC Logic One: 164 to 264 VAC 2.2 mA typical 40 to 264 VAC 1 kΩ Maximum On-state resistance		C	4	1

TA Part No. PA[a]	Input Signal	Output Signal	Term. Type[b]	BP to TA Cable Type[c]	TA Cert. Type [d]
	100 kΩ Minimum Off-state resistance				
RH924HN	When replacing a main FBM24A: 16 channel Voltage Monitor, external source 150 VDC Maximum voltage Logic Zero: 0 to 10 VDC Logic One: 33 to 150 VDC 2.5 mA typical 10 to 150 VDC 1 kΩ Maximum On-state resistance 100 kΩ Minimum Off-state resistance		C	4	1, 2, 4
RH924HP	When replacing a main FBM24B: 16 channel Contact Sense, internal source 48 VDC nominal open circuit voltage 2.5 mA ±20% short circuit current 1 kΩ Maximum On-state resistance 100 kΩ Minimum Off-state resistance		C	4	1, 2, 4

TA Part No. PA[a]	Input Signal	Output Signal	Term. Type[b]	BP to TA Cable Type[c]	TA Cert. Type [d]
RH924HQ	When replacing a main FBM24C: 16 channel Contact sense with external source on Channel 1 150 VDC Maximum voltage Logic Zero: 0 to 10 VDC Logic One: 33 to 150 VDC 2.5 mA typical 10 to 150 VDC 1 kΩ Maximum On-state resistance 100 kΩ Minimum Off-state resistance		C	4	1, 2, 4

(a) PA is Polyamide rated from -20 to +70°C (-4 to +158°F).

(b) C = TA with compression terminals, RL = TA with ring lug terminals. Knife has compression terminals.

(c) See Cable Types (Baseplate to Main TA Cables) and Part Numbers, page 22 for cable part numbers and specifications.

(d) See Certifications for Termination Assemblies, page 22 for Termination Assembly certification definitions.

(e) Relays used to switch a DC source should have lower current limits. Relays used to switch inductive loads should have protective elements added across the load or contacts.

(f) See the details of the relay specifications in General Purpose Plug-In Relay Termination Assembly Specifications, page 27.

Functional Specifications - Expansion Termination Assemblies

TA Part No. PA[a]	Input Signal	Output Signal	Term Type[b]	Main TA to Exp. TA Cable Type[c]	TA Cert. Type [d]
RH924HF [e]	When replacing an expansion FBM14A/B: 8 channel Voltage Monitor external source 130 VDC Maximum voltage Logic Zero: 0 to 5 VDC Logic One: 15 to 130 VDC 2.2 mA typical 5 to 130 VDC 1 kΩ Maximum On-state resistance 100 kΩ Minimum Off-state resistance When replacing an expansion FBM14C/D: Contact sense internal source 24 VDC ±10% Open circuit voltage 2.5 mA maximum short circuit current 1 kΩ Maximum On-state resistance 100 kΩ Minimum Off-state resistance	When replacing an expansion FBM14A/C: 8 channel Output Switch external source 60 VDC Maximum voltage 0.5 V maximum voltage drop @ 0.5 A 0.5 A maximum current 0.75 A current limit Shorted load duration: indefinite (duty-cycle limited) 1.0 mA maximum off-state leakage When replacing an expansion FBM14B/D: output switch internal source 11 VDC ±2 V Open circuit voltage Source resistance 680 Ω nominal Shorted load duration: indefinite 0.5 mA maximum off-state leakage	C	6	1, 2, 4
RH924HH [e]	When replacing an expansion FBM15: 8 channel Voltage Monitor, external source 132 VAC or 150 VDC Logic Zero: 0 to 20 VAC; 0 to 20 VDC Logic One: 79 to 132 VAC; 75 to 150 VDC 2.2 mA typical 20 to 132 VAC 1 kΩ Maximum On-state resistance	When replacing an expansion FBM15: 8 channel Output Switch external source 132 VAC Maximum voltage 0.4 V maximum voltage drop @ 1 A 2 A maximum current per channel 12 A maximum current per TA 3 A current limit 24 A surge current limit for 10 ms	C	6	1

TA Part No. PA[a]	Input Signal	Output Signal	Term Type[b]	Main TA to Exp. TA Cable Type[c]	TA Cert. Type [d]
	100 kΩ Minimum Off-state resistance	Shorted load duration: indefinite (duty-cycle limited) 3 mA maximum off-state leakage			
RH924HK [e]	When replacing an expansion FBM16: 8 channel Voltage Monitor 264 VAC Maximum voltage Logic Zero: 0 to 40 VAC Logic One: 164 to 264 VAC 2.2 mA typical 40 to 264 VAC 1 kΩ Maximum On-state resistance 100 kΩ Minimum Off-state resistance	When replacing an expansion FBM16: 8 channel Output Switch external source 264 VAC Maximum voltage 0.6 V maximum voltage drop @ 0.5 A 1 A maximum current per channel 7 A maximum current per TA 1.5 A current limit 12 A surge current limit for 10 ms Shorted load duration: indefinite (duty-cycle limited) 2.5 mA maximum off-state leakage	C	6	1
RH924HX [e]	When replacing an expansion FBM27A: 8 channel Voltage Monitor, external source 150 VDC Maximum voltage Logic Zero: 0 to 10 VDC Logic One: 33 to 150 VDC 2.5 mA typical 10 to 150 VDC 1 kΩ Maximum On-state resistance 100 kΩ Minimum Off-state resistance	When replacing an expansion FBM27A: 8 channel Output Switch external source 150 VDC Maximum voltage 0.4 V maximum voltage drop @ 1 A 2 A maximum current per channel 12 A maximum current per TA 2.3 A current limit 20 A surge current limit, 20 ms Shorted load duration: indefinite (duty-cycle limited) 2 mA maximum off-state leakage	C	6	1, 2, 4

TA Part No. PA[a]	Input Signal	Output Signal	Term Type[b]	Main TA to Exp. TA Cable Type[c]	TA Cert. Type [d]
RH924HY[e]	When replacing an expansion FBM27B: 8 channel Contact Sense internal source 48 VDC nominal open circuit voltage 2.5 mA ±20% short circuit current 1 kΩ Maximum On-state resistance 100 kΩ Minimum Off-state resistance	When replacing an expansion FBM27B: 8 channel Output Switch external source 150 VDC Maximum voltage 0.4 V maximum voltage drop @ 1 A 2 A maximum current per channel 12 A maximum current per TA 2.3 A current limit 20 A surge current limit, 20 ms Shorted load duration: indefinite (duty-cycle limited) 2 mA maximum off-state leakage	C	6	1, 2, 4
RH924HZ[e]	When replacing an expansion FBM27C: 8 channel Contact Sense external source on channel 1 150 VDC Maximum voltage Logic Zero: 0 to 10 VDC Logic One: 33 to 150 VDC 2.5 mA typical 10 to 150 VDC 1 kΩ Maximum On-state resistance 100 kΩ Minimum Off-state resistance	When replacing an expansion FBM27C: 8 channel Output Switch external source 150 VDC Maximum voltage 0.4 V maximum voltage drop @ 1 A 2 A maximum current per channel 12 A maximum current per TA 2.3 A current limit 20 A surge current limit, 20 ms Shorted load duration: indefinite (duty-cycle limited) 2 mA maximum off-state leakage	C	6	1, 2, 4

TA Part No. PA[a]	Input Signal	Output Signal	Term Type[b]	Main TA to Exp. TA Cable Type[c]	TA Cert. Type [d]
RH924JB[e]	When replacing an expansion FBM42A: 8 channel Voltage Monitor external source 60 VDC Maximum voltage Logic Zero: 0 to 5 VDC Logic One: 15 to 60 VDC 6 mA maximum input current 1 kΩ Maximum On-state resistance 100 kΩ Minimum Off-state resistance When replacing an expansion FBM42C: Contact sense internal source 24 VDC ±20% Open circuit voltage 5 mA maximum short circuit current 1 kΩ Maximum On-state resistance 100 kΩ Minimum Off-state resistance	When replacing an expansion FBM42A/C: 8 channel Output Switch external source 60 VDC Maximum voltage 0.4 V maximum voltage drop @ 1 A 2.25 A maximum current 12 A maximum current per TA 10 A surge current limit for 20 ms maximum Shorted load duration: indefinite (duty-cycle limited) 0.5 mA maximum off-state leakage	C	6	1, 2, 4

(a) PA is Polyamide rated from -20 to +70°C (-4 to +158°F).

(b) C = TA with compression terminals, RL = TA with ring lug terminals. Knife has compression terminals.

(c) See Table 2, page 22 and Table 3, page 23 for cable part numbers and specifications.

(d) See Table 1, page 22 for Termination Assembly certification definitions.

(e) Connect this TA to the main TA.

Table 1 - Certifications for Termination Assemblies

Type	Certification
Type 1	TAs are UL/UL-C listed as suitable for use in Class I; Groups A-D; Division 2 temperature code T4 hazardous locations. They are DEMKO certified Ex nA IIC T4 for use in Zone 2 potentially explosive atmospheres.
Type 2	TAs are UL/UL-C listed as associated apparatus for supplying non-incendive field circuits Class I; Groups A-D; Division 2 hazardous locations when connected to specified DIN rail mounted FBMs and field circuits meeting entity parameter constraints specified in *Standard and Compact 200 Series Subsystem User's Guide* (B0400FA). They are also DEMKO certified as associated apparatus for supplying field circuits for Group IIC, Zone 2 potentially explosive atmospheres. Field circuits are also Class 2 limited energy (60 VDC, 30 VAC, 100 VA or less) if customer-supplied equipment meets Class 2
Type 4	All field circuits are Class 2 limited energy (60 VDC, 30 VAC, 100 VA or less) if customer-supplied equipment meets Class 2 limits.
Type 5	The TA and its field circuitry are for use in only ordinary (non-hazardous) locations.

Table 2 - Cable Types (Baseplate to Main TA Cables) and Part Numbers

Cable Length	Type 4 P/PVC[(a)]	Type LSZH[(b)]
0.5 (1.6)	RH916FG	RH928BA
1.0 (3.2)	RH916FH	RH928BB
2.0 (6.6)	RH931RQ	RH928BC
3.0 (9.8)	RH916FJ	RH928BD
5.0 (16.4)	RH916FK	RH928BE
10.0 (32.8)	RH916FL	RH928BF
15.0 (49.2)	RH916FM	RH928BG
20.0 (65.6)	RH916FN	RH928BH
25.0 (82.0)	RH916FP	RH928BJ
30.0 (98.4)	RH916FQ	RH928BK

(a) P/PVC is polyurethane outer jacket and semi-rigid PVC primary conductor insulation. P/PVC cable is rated at -20 to +80°C (-4 to 176°F).

(b) Low smoke zero halogen or low smoke free of halogen (LSZH) is a material classification used for cable jacketing. LSZH is composed of thermoplastic or thermoset compounds that emit limited smoke and no halogen when exposed to high sources of heat. Temperature range: -40 to +105°C (-40 to +221°F).

Table 3 - Cable Types (Main TA to Expansion TA Cables) and Part Numbers

Cable Length m (ft)	Type 6 P/PVC[a]	Type 6 LSZH[b]
0.75 (2.5)	RH924CK	RH928CQ

(a) P/PVC is polyurethane outer jacket and semi-rigid PVC primary conductor insulation. P/PVC cable is rated at -20 to +80°C (-4 to 176°F).

(b) Low smoke zero halogen or low smoke free of halogen (LSZH) is a material classification used for cable jacketing. LSZH is composed of thermoplastic or thermoset compounds that emit limited smoke and no halogen when exposed to high sources of heat. Temperature range: -40 to +105°C (-40 to +221°F).

Dimensions - Nominal

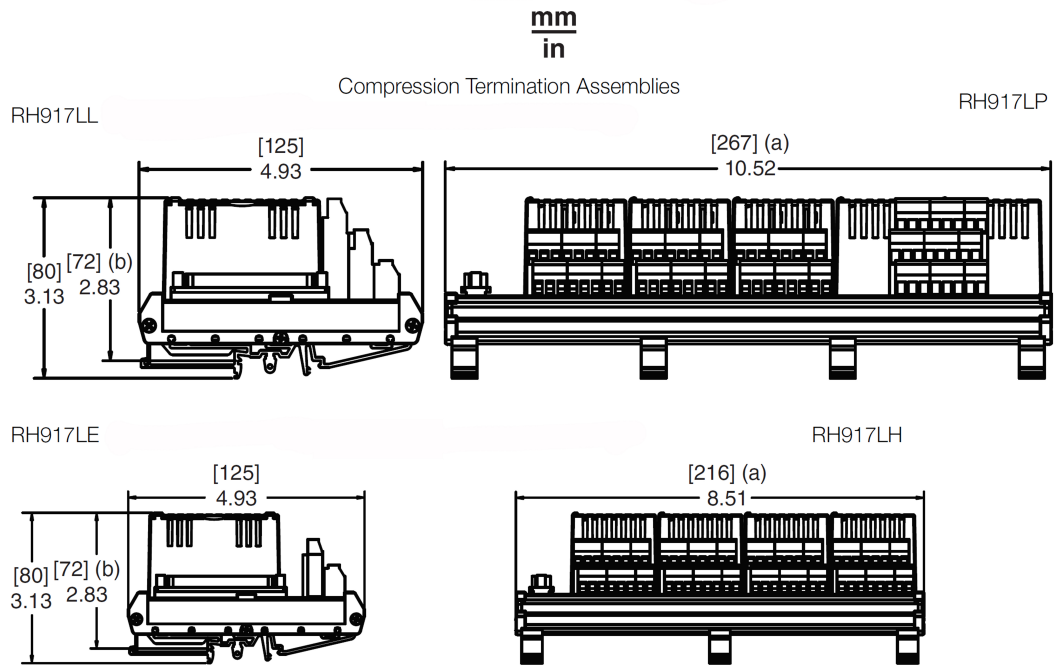

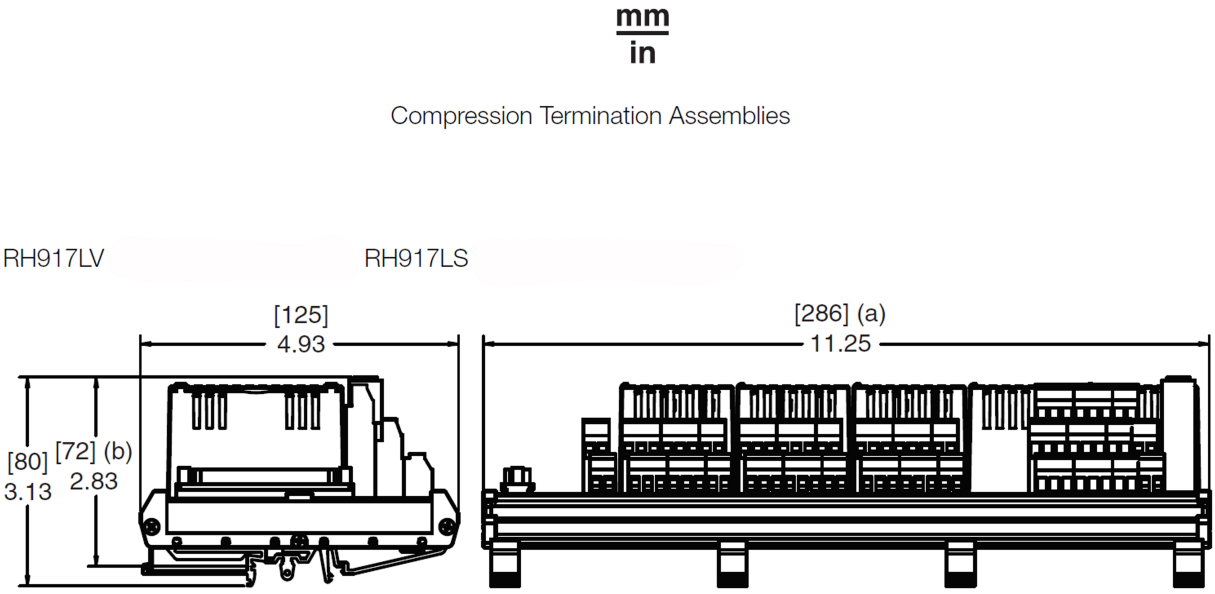

(a) Overall width – for determining DIN rail loading.
(b) Height above DIN rail (add to DIN rail height for total).

mm
in

Compression Termination Assemblies

RH924HA RH924HF



RH924HC RH924HL RH924HN RH924HQ

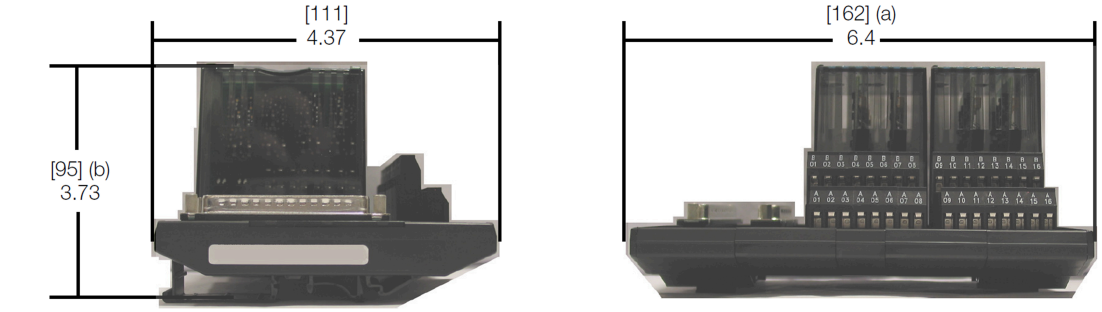

RH924HH RH924HK

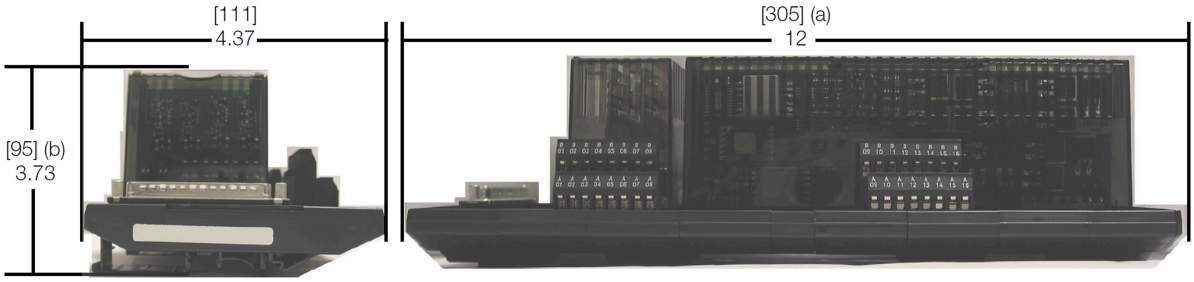

(a) Overall width – for determining DIN rail loading.
(b) Height above DIN rail (add to DIN rail height for total).

[mm]
in

Compression Termination Assemblies

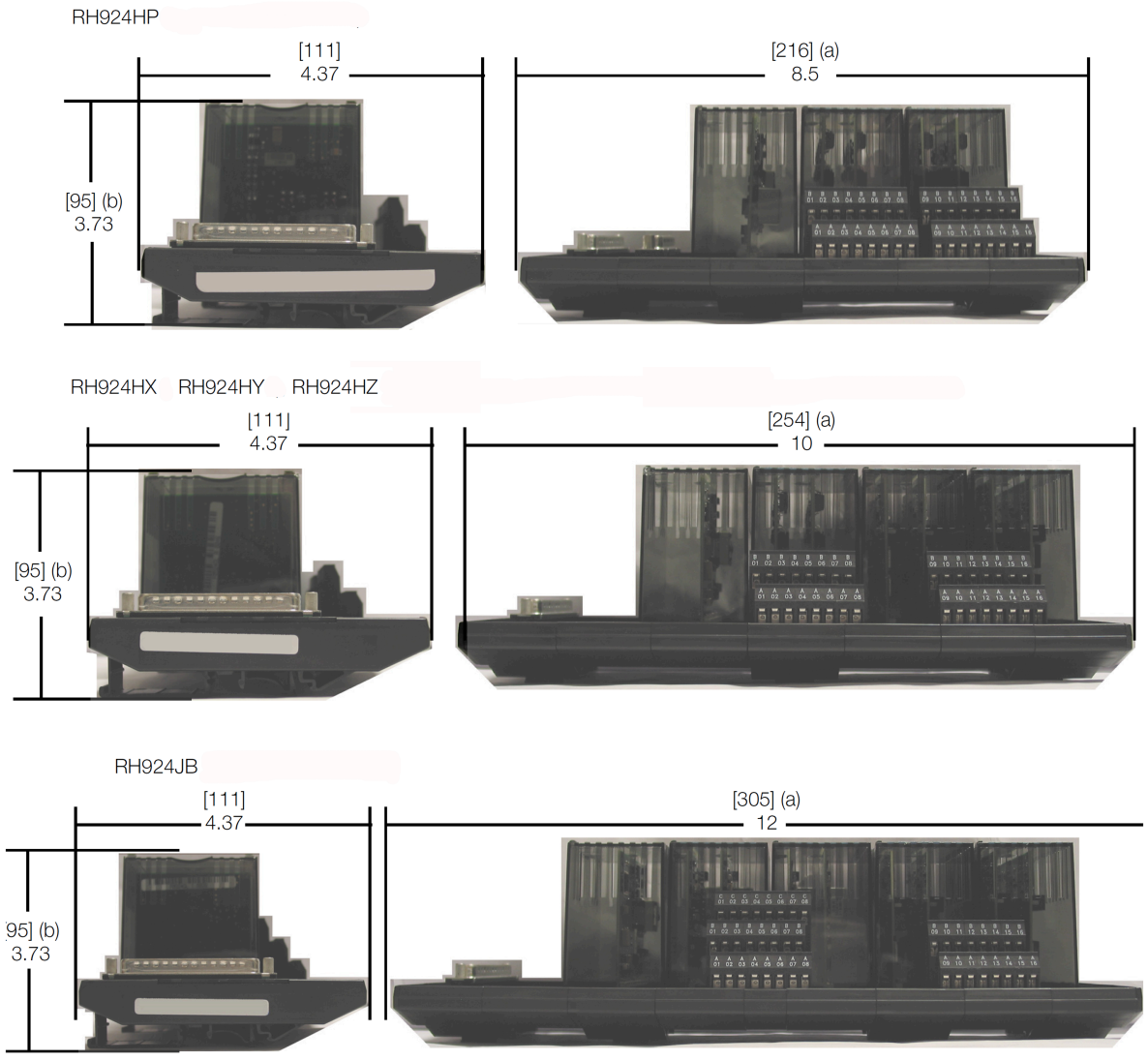

(a) Overall width – for determining DIN rail loading.
(b) Height above DIN rail (add to DIN rail height for total).

(a) Overall width — for determining DIN rail loading.

(b) Height above DIN rail (add to DIN rail height total).

General Purpose Plug-In Relay Termination Assembly Specifications

Part Number	P0165CL
Description	SPDT, plug-in, field replaceable
Maximum Rated Load[a] [b]	• DC Resistive: 5 A at 30 VDC, 0.6A @ 125 VDC • DC Inductive (L/R = 7 MS): 5 A at 30 VDC, 0.4 @ 125 VDC • AC Resistive: 5 A at 240 VAC • AC Inductive (P.F. = 0.4): 5 A at 240 VAC
Carry Current[a]	5 A
Maximum Operating Voltage[a]	240 VAC, 125 VDC[b]
Maximum Operating Current[a]	5A
Maximum Switching Capacity[a]	1200 VA, 150 W
Minimum Permissible Load	100 mA, 5 VDC
Contact Material	AgCdO
Contact Resistance	30 mΩ maximum
Life Expectancy	• Mechanical: 20 X 10^6 operations minimum • Electrical: 100 X10^3 (at rated load)
Response Time	• Operate: 15 ms maximum • Release: ◦ ac: 10 ms maximum ◦ DC: 5 ms maximum

[a] The manufacturer's rated load is derated; the Termination Assembly maximum rated load is 5 A at 240 VAC/5 A at 30 VDC per channel, or 12 A maximum per group of eight outputs.

[b] The relay load must be derated at the higher DC voltages. See the "5 A Relay (P0165CL)" section in *EcoStruxure™ Foxboro™ DCS Standard and Compact 200 Series Subsystem User's Guide* (B0400FA) for a graph illustrating the maximum switching capacity of the 5 A relays used in the termination assemblies.

Related Documents

Topic	Document
100 Series	*EcoStruxure™ Foxboro™ DCS 100 Series Fieldbus Module Upgrade Subsystem Overview* (PSS 41H-2W100)
	EcoStruxure™ Foxboro™ DCS Termination Assembly Adapter Modules for 100 Series Upgrade (PSS 41H-2W4)
	EcoStruxure™ Foxboro™ DCS 100 Series Conversion Mounting Structures (PSS 41H-2W8)
200 Series	*EcoStruxure™ Foxboro™ DCS Standard and Compact 200 Series Subsystem User's Guide* (B0400FA)
	EcoStruxure™ Foxboro™ DCS Standard 200 Series Subsystem Overview (PSS 41H-2SOV)
	EcoStruxure™ Foxboro™ DCS Standard 200 Series Baseplates (PSS 41H-2SBASPLT)
	EcoStruxure™ Foxboro™ DCS Standard and Compact 200 Series I/O - Agency Certifications (PSS 41H-2CERTS)
FCP280	*EcoStruxure™ Foxboro™ DCS Field Control Processor 280 (FCP280) Integrated Control Software* (PSS 41S-3FCPICS)

Proposition 65

WARNING: This product can expose you to chemicals including lead and lead compounds, which are known to the State of California to cause cancer and birth defects or other reproductive harm. For more information go to www.P65Warnings.ca.gov.

Schneider Electric Systems USA, Inc.
70 Mechanic Street
Foxboro, Massachusetts 02035–2040
United States of America

Global Customer Support: https://pasupport.se.com

As standards, specifications, and design change from time to time, please ask for confirmation of the information given in this publication.

© 2015–2025 Schneider Electric. All rights reserved.

PSS 41H-2S219, Rev B