Foxboro™ DCS

FBM215 HART® Communication Output Module

PSS 41H-2S215

Product Specification

May 2025



Legal Information

The information provided in this document contains general descriptions, technical characteristics and/or recommendations related to products/solutions.

This document is not intended as a substitute for a detailed study or operational and site-specific development or schematic plan. It is not to be used for determining suitability or reliability of the products/solutions for specific user applications. It is the duty of any such user to perform or have any professional expert of its choice (integrator, specifier or the like) perform the appropriate and comprehensive risk analysis, evaluation and testing of the products/solutions with respect to the relevant specific application or use thereof.

The Schneider Electric brand and any trademarks of Schneider Electric SE and its subsidiaries referred to in this document are the property of Schneider Electric SE or its subsidiaries. All other brands may be trademarks of their respective owner.

This document and its content are protected under applicable copyright laws and provided for informative use only. No part of this document may be reproduced or transmitted in any form or by any means (electronic, mechanical, photocopying, recording, or otherwise), for any purpose, without the prior written permission of Schneider Electric.

Schneider Electric does not grant any right or license for commercial use of the document or its content, except for a non-exclusive and personal license to consult it on an "as is" basis.

Schneider Electric reserves the right to make changes or updates with respect to or in the content of this document or the format thereof, at any time without notice.

To the extent permitted by applicable law, no responsibility or liability is assumed by Schneider Electric and its subsidiaries for any errors or omissions in the informational content of this document, as well as any non-intended use or misuse of the content thereof.

Overview

The HART Communication Output Module (FBM215) contains eight channel-isolated outputs. The FBM215 supports any mix of standard 4 to 20 mA devices and HART devices (the signals are electrically compatible).

The FBM215 can serve as a HART communications field device host, enabling Foxboro™ DCS to request and receive two digital messages per second from the field device. The message pass-through capability can be used to support HART universal, common practice, and device-specific commands, but it cannot support the burst communication mode. These commands are implemented using the Foxboro DCS Field Device Expert for HART. For details, see *Field Device Expert for HART Devices Control and I/O* (PSS 41S-10FDMHRT).

The FBM215 provides an isolated power supply for each channel.

Features

- 8 channel-isolated output channels, each providing one of the following outputs:
  - Standard 4 to 20 mA analog output signal
  - Digital HART Frequency Shift Keying (FSK) signal superimposed on a 4 to 20 mA analog output signal
- FSK modem dedicated to each output channel for bi-directional digital communications with a HART field device
- Galvanic isolation of all output channels from each other, and from ground and module logic
- Support for HART universal commands necessary to interface the field device with the Foxboro DCS database
- Rugged design suitable for enclosure in Class G3 (harsh) environments
- Termination Assemblies (TAs) for locally or remotely connecting field wiring to the FBM215

Standard Design

The FBM215 has a rugged extruded aluminum exterior for physical protection of the circuits. Enclosures specially designed for mounting the Foxboro DCS Fieldbus Modules (FBMs) provide various levels of environmental protection, up to harsh environments per ISA Standard S71.04.

Visual Indicators

Light-emitting diodes (LEDs) incorporated into the front of the module provide visual indication of the module's operational status, and communication activity of the channels.

Easy Removal/Replacement

The module can be removed/replaced without removing field device termination cabling, power, or communications cabling.

Fieldbus Communication

A Fieldbus Communication Module or a Control Processor interfaces the redundant 2 Mbps module Fieldbus used by the FBMs. The FBM215 module accepts communication from either path (A or B) of the redundant 2 Mbps fieldbus. If one path is unsuccessful or is switched at the system level, the module continues communication over the active path.

Modular Baseplate Mounting

The module mounts on a modular baseplate, which accommodates up to four or eight FBMs. The modular baseplate is either DIN rail mounted or rack mounted, and includes signal connectors for redundant fieldbus, redundant independent DC power, and termination cables.

Termination Assemblies

Field output signals connect to the FBM subsystem via DIN rail mounted Termination Assemblies (TAs). The TAs used with the FBM215 are described in Termination Assemblies and Cables, page 10.

Functional Specifications

Field Device Channels	• Supported HART Instrument Types: HART instruments compliant to Version 5, 6, or 7 of the HART specifications may be used • Interface: 8 isolated output channels • Communications to the Device: Point-to-point, master/slave, asynchronous, half-duplex, at 1200 baud • Error Checking: Parity on each byte, and one CRC check byte on each message • Speed: 2 messages per second • Fastest Allowed ECB Block Period: 100 ms; however, we recommend that you see the *Sizing Guidelines and Excel Workbook* appropriate for your Control Processor to determine the optimal loading for a 100 msec Block Processing Cycle (BPC). • Maximum Distance (FBM215 to Field Device): Meets HART FSK physical layer specification HCF_SPEC-54, Revision 8.1 [up to 3030 m (10000 ft)] **NOTE:** The maximum allowable distance decreases when the loop is operated through an intrinsic safety barrier. The maximum distance of the field device from the FBM is a function of compliance voltage (19 VDC at 20.4 mA), wire and load resistance, and voltage drop at the field device. • Current Outputs: ◦ Analog Accuracy (Includes Linearity): ±0.05% of span (between 4 mA and 20 mA) ◦ Output Load: 750 Ω maximum ◦ Maximum Rate of Change: 20 mA in 60 milliseconds ◦ Resolution: 13 bits • Loop Power Supply Protection: Each channel is channel-to-channel galvanically isolated, current limited, and voltage regulated. All analog outputs are limited by their design to about 25 mA. If the output FET shorts, the output current could increase up to 100 mA. In normal operation, the FBM outputs a constant current into a 0 to 750 Ω load. • Isolation: The channels are galvanically isolated (both optical and transformer isolation) from each other, and from ground and module logic. The module withstands, without damage, a potential of 600 VAC applied for one minute between the isolated channels and earth (ground).

	⚠⚠DANGER **HAZARD OF ELECTRIC SHOCK, EXPLOSION, OR ARC FLASH** Although the module can withstand a maximum of 600 VAC applied for one minute between any channel, DO NOT apply voltages beyond the published input ranges. The channels are NOT intended for permanent connection to hazardous voltage circuits. Understand that connection of these channels to voltages greater than 30 VAC or 60 VDC violates electrical safety code requirements and may expose users to electric shock. **Failure to follow these instructions will result in death or serious injury.**
Fieldbus Communication	Communicates with its associated FCM or FCP via the redundant 2 Mbps module Fieldbus
Power Requirements	• Input Voltage Range (Redundant): 24 VDC +5% • Consumption: 7 W (maximum) • Heat Dissipation: 5 W (maximum)
Calibration Requirements	Calibration of the module and termination assembly (TA) is not required.
Regulatory Compliance: Electromagnetic Compatibility (EMC)	• *European EMC Directive 2004/108/EC (Prior to April 20, 2016) and 2014/30/EU (Beginning April 20, 2016)*: Meets: EN61326-1:2013 Class A Emissions and Industrial Immunity Levels
Regulatory Compliance: Product Safety	• *Underwriters Laboratories (UL) for U.S. and Canada*: UL/UL-C listed as suitable for use in UL/UL-C listed Class I, Groups A-D; Division 2; temperature code T4 enclosure based systems when connected to specified Foxboro DCS processor modules. Communications circuits also meet the requirements for Class 2 as defined in Article 725 of the National Electrical Code (NFPA No.70) and Section 16 of the Canadian Electrical Code (CSA C22.1). For more information, see *Standard and Compact 200 Series Subsystem User's Guide* (B0400FA). • *European Low Voltage Directive 2006/95/EC (Prior to April 20, 2016) and 2014/35/EU (Beginning April 20, 2016) and Explosive Atmospheres (ATEX) directive 94/9/EC (Prior to April 20, 2016) and 2014/34/EU (Beginning April 20, 2016)*: DEMKO certified as Ex nA IIC T4 for use in certified Zone 2 enclosure when connected to specified processor modules as described in the *Standard and Compact 200 Series Subsystem User's Guide* (B0400FA). Also, see Table 2.
RoHS Compliance	Complies with European RoHS Directive 2011/65/EU, including amending Directives 2015/863 and 2017/2102.
IECEx Certification	IECEx Certified

Environmental Specifications

	Operating	Storage
Temperature	• Module: -20 to +70°C (-4 to +158°F) • Termination Assembly — PA (Polyamide): -20 to +70°C (-4 to +158°F)	-40 to +70°C (-40 to +158°F)
Relative Humidity	5 to 95% (noncondensing)	
Altitude	-300 to +3,000 m (-1,000 to +10,000 ft)	-300 to +12,000 m (-1,000 to +40,000 ft)
Contamination	Suitable for use in Class G3 (Harsh) environments as defined in ISA Standard S71.04, based on exposure testing according to EIA Standard 364-65, Class III.	
Vibration	0.75g from 5 to 500 Hz	

NOTE: The environmental limits of this module may be enhanced by the type of enclosure containing the module. See the applicable Product Specification Sheet (PSS) that describes the type of enclosure to be used.

Physical Specifications

Mounting	• Module: The FBM215 mounts on a modular baseplate. The baseplate can be mounted on a DIN rail (horizontally or vertically), or horizontally on a 19-inch rack using a mounting kit. Alternatively, FBM215 mounts on a 100 Series conversion mounting structure. See *Standard 200 Series Baseplates* (PSS 41H-2SBASPLT) or *100 Series Conversion Mounting Structures* (PSS 41H-2W8) for details. • Termination Assembly (TA): The TA mounts on a DIN rail and accommodates multiple DIN rail styles including 32 mm (1.26 in) and 35 mm (1.38 in).
Weight	• Module: 284 g (10 oz) approximate • Termination Assembly: Compression: 181 g (0.40 lb) approximate
Dimensions	• Module: ◦ Height: 102 mm (4 in) 114 mm (4.5 in) including mounting lugs ◦ Width: 45 mm (1.75 in) ◦ Depth: 104 mm (4.11 in) • Termination Assembly: See Dimensions - Nominal, page 13
Part Numbers	• FBM215 Module: RH922VU • Termination Assemblies: See Functional Specifications - Termination Assemblies, page 11
Termination Cables	• Cable Lengths: Up to 30 m (98 ft) • Cable Materials: Polyurethane or Low Smoke Zero Halogen (LSZH) • Termination Cable Type: Types 1 – See Table 2. • Cable Connection – TA: ◦ FBM Baseplate End: 37-pin D-subminiature ◦ Termination Assembly End: 25-pin D-subminiature

Construction – Termination Assembly	• Material: Polyamide (PA), compression
Field Termination Connections	• Compression-Type Accepted Wiring Sizes: ◦ Solid/Stranded/AWG: 0.2 to 4 mm^2 /0.2 to 2.5 mm^2 /24 to 12 AWG ◦ Stranded with Ferrules: 0.2 to 2.5 mm^2 with or without plastic collar

Termination Assemblies and Cables

Field output signals connect to the FBM subsystem via DIN rail mounted Termination Assemblies (TAs), which are electrically passive. TAs for the FBM215 are available in the following forms:

- Compression screw type using Polyamide (PA) material

See Functional Specifications - Termination Assemblies, page 11 for a list of TAs used with the FBM215.

The FBM215 provides sufficient loop resistance to allow use of the HART Hand-Held Terminal, or *PC20 Intelligent Field Device Configurator* (PSS 2A1Z3 E).

A removable termination cable connects the DIN rail mounted TA to the FBM via a field connector on the baseplate in which the FBM is installed. Termination cables are available in the following materials:

- Polyurethane
- Low Smoke Zero Halogen (LSZH)

Termination cables are available in a variety of lengths, up to 30 meters (98 feet), allowing the TA to be mounted in either the enclosure or in an adjacent enclosure. See Table 2 for a list of termination cables used with the TAs for the FBM215.

Functional Specifications - Termination Assemblies

FBM Type	Output Signal	TA Part Number PA[a]	Termination Type[b]	TA Cable Type[c]	TA Cert. Type[d]
FBM215	8 output channels, 4 to 20 mA analog signal, alone or with HART signal superimposed	RH926SP	C	1	1, 2

(a) PA is polyamide rated from -20 to +70°C (-4 to +158°F).

(b) C = Termination Assembly (TA) with compression terminals.

(c) See Cable Types and Part Numbers for cable part numbers and specifications.

(d) See Certification for Termination Assemblies, page 11 for TA certification definitions.

Table 1 - Certification for Termination Assemblies

Type	Certification[a]
Type 1	TAs are UL/UL-C listed as suitable for use in Class I; Groups A-D; Division 2 temperature code T4 hazardous locations. They are DEMKO certified EEx nA IIC T4 for use in Zone 2 potentially explosive atmospheres.
Type 2	TAs are UL/UL-C listed as associated apparatus for supplying non-incendive field circuits Class I; Groups A-D; Division 2 hazardous locations when connected to specified 200 Series FBMs and field circuits meeting entity parameter constraints specified in *Standard and Compact 200 Series Subsystem User's Guide* (B0400FA). They are also DEMKO certified as associated apparatus for supplying field circuits for Group IIC, Zone 2 potentially explosive atmospheres. Field circuits are also Class 2 limited energy (60 VDC, 30 VAC, 100 VA or less) if customer-supplied equipment meets Class 2 limits.

(a) All TAs are UL/UL-C listed to comply with applicable ordinary location safety standards for fire and shock hazards. Hazardous location types comply with ATEX directive for II 3 G use. They also comply with the requirements of the European Low Voltage Directive. All listings/certifications require installation and use within the constraints specified in *Standard and Compact 200 Series Subsystem User's Guide* (B0400FA) and the conditions stated in UL and DEMKO reports.

Table 2 - Cable Types and Part Numbers

Cable Length m (ft)	Type 1 P/PVC[a]	Type 1 LSZH[b]
0.5 (1.6)	RH916DA	RH928AA
1.0 (3.2)	RH916DB	RH928AB
2.0 (6.6)	RH931RM	RH928AC
3.0 (9.8)	RH916DC	RH928AD
5.0 (16.4)	RH916DD	RH928AE
10.0 (32.8)	RH916DE	RH928AF
15.0 (49.2)	RH916DF	RH928AG
20.0 (65.6)	RH916DG	RH928AH
25.0 (82.0)	RH916DH	RH928AJ
30.0 (98.4)	RH916DJ	RH928AK

[a] P/PVC is polyurethane outer jacket and semi-rigid PVC primary conductor insulation.

[b] Low smoke zero halogen or low smoke free of halogen (LSZH) is a material classification used for cable jacketing. LSZH is composed of thermoplastic or thermoset compounds that emit limited smoke and no halogen when exposed to high sources of heat. Temperature range: -40 to +105°C (-40 to +221°F).

Migration Use of Termination Assemblies

When an FBM215 is used to replace the 100 Series FBM37, it may use any of the appropriate termination assemblies (TAs) listed above for the FBM37's field I/O wiring.

Alternatively, the FBM215 can accept this field wiring through a Termination Assembly Adapter (TAA) instead of a TA. This is discussed in *Termination Assembly Adapter Modules for 100 Series Upgrade* (PSS 41H-2W4).

Dimensions - Nominal

Figure 1 - Compression Termination Assembly (RH926SP)

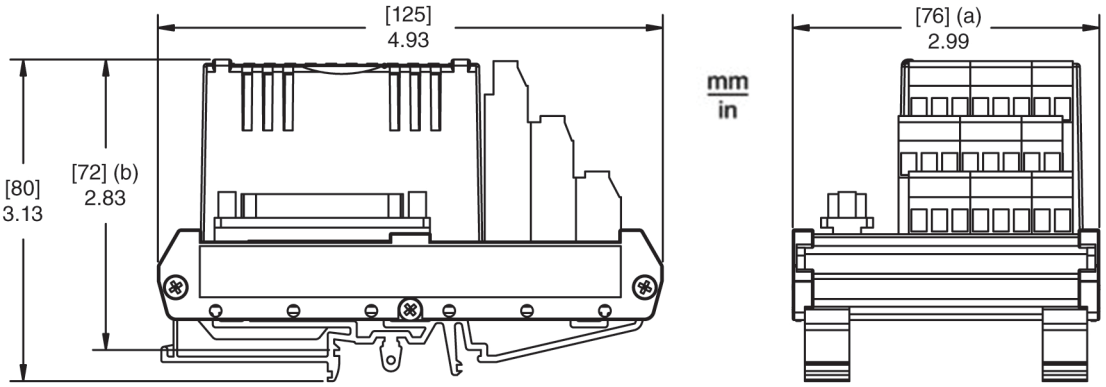

(a) Overall width — for determining DIN rail loading.

(b) Height above DIN rail (add to DIN rail height for total).

Related Documents

Document Number	Description
PSS 41H-2SOV	*Standard 200 Series Subsystem Overview*
PSS 41H-2W100	*100 Series Fieldbus Module Upgrade Subsystem Overview*
PSS 41H-2CERTS	*Standard and Compact 200 Series I/O - Agency Certifications*
PSS 41H-2W4	*Termination Assembly Adapter Modules for 100 Series Upgrade*
PSS 41H-2SBASPLT	*Standard 200 Series Baseplates*
PSS 41H-2W8	*100 Series Conversion Mounting Structures*
PSS 41S-3FCPICS	*Field Control Processor 280 (FCP280) Integrated Control Software*
PSS 41S-10FDMHRT	*Field Device Expert for HART Devices Control and I/O*
B0400FA	*Standard and Compact 200 Series Subsystem User's Guide*

Proposition 65

WARNING: This product can expose you to chemicals including lead and lead compounds, which are known to the State of California to cause cancer and birth defects or other reproductive harm. For more information go to www.P65Warnings.ca.gov.

Schneider Electric Systems USA, Inc.
70 Mechanic Street
Foxboro, Massachusetts 02035–2040
United States of America

Global Customer Support: https://pasupport.se.com

As standards, specifications, and design change from time to time, please ask for confirmation of the information given in this publication.

© 2017–2025 Schneider Electric. All rights reserved.

PSS 41H-2S215, Rev B