Foxboro™ DCS

FBM214b HART® Communication Input Module

PSS 41H-2S214

Product Specification

May 2025



Legal Information

The information provided in this document contains general descriptions, technical characteristics and/or recommendations related to products/solutions.

This document is not intended as a substitute for a detailed study or operational and site-specific development or schematic plan. It is not to be used for determining suitability or reliability of the products/solutions for specific user applications. It is the duty of any such user to perform or have any professional expert of its choice (integrator, specifier or the like) perform the appropriate and comprehensive risk analysis, evaluation and testing of the products/solutions with respect to the relevant specific application or use thereof.

The Schneider Electric brand and any trademarks of Schneider Electric SE and its subsidiaries referred to in this document are the property of Schneider Electric SE or its subsidiaries. All other brands may be trademarks of their respective owner.

This document and its content are protected under applicable copyright laws and provided for informative use only. No part of this document may be reproduced or transmitted in any form or by any means (electronic, mechanical, photocopying, recording, or otherwise), for any purpose, without the prior written permission of Schneider Electric.

Schneider Electric does not grant any right or license for commercial use of the document or its content, except for a non-exclusive and personal license to consult it on an "as is" basis.

Schneider Electric reserves the right to make changes or updates with respect to or in the content of this document or the format thereof, at any time without notice.

To the extent permitted by applicable law, no responsibility or liability is assumed by Schneider Electric and its subsidiaries for any errors or omissions in the informational content of this document, as well as any non-intended use or misuse of the content thereof.

Overview

The FBM214b HART Communication Input Module contains eight 4 to 20 mA individually isolated analog input channels. It supports any mix of standard 4-20 mA devices and HART devices.

The FBM214b can serve as a HART communications field device host, enabling Foxboro™ DCS to request and receive two digital messages per second from the field device. The message pass-through capability can be used to support HART universal, common practice, and device-specific commands, but it cannot support the burst communication mode. These commands are implemented using the Foxboro DCS Field Device Expert for HART. For details, see *Field Device Expert for HART Devices Control and I/O* (PSS 41S-10FDMHRT).

The FBM214b provides individually isolated power supplies to power each of the eight channels.

Optionally, the input channels can be powered by an external power supply. However, when a common external power supply is used with two or more channels, a Cable Balun module is required to help prevent HART communication channel crosstalk.

Features

- 8 analog input channels, each accepting one of the following inputs:
  - Standard 4 to 20 mA analog sensor signal
  - Digital HART Frequency Shift Keying (FSK) signal superimposed on a 4 to 20 mA analog input signal
- FSK modem dedicated to each input channel for bi-directional digital communications with a HART field device
- Analog to digital conversion of each of the 4 to 20 mA input signals from the HART devices
- Support for the HART universal commands necessary to interface the field device with the Foxboro DCS database
- Per channel galvanic isolation of each of the 8 input channels from each other, ground and module logic
- Rugged design suitable for enclosure in Class G3 (harsh) environments
- High accuracy achieved by sigma-delta data conversions for each channel
- Termination Assembly (TA) for locally or remotely connecting field wiring to the FBM214b
- TA for per channel internally and/or externally loop powered transmitters

Standard Design

The FBM214b has a rugged extruded aluminum exterior for physical protection of the circuits. Enclosures specially designed for mounting the Foxboro DCS Fieldbus Modules (FBMs) provide various levels of environmental protection, up to harsh environments per ISA Standard S71.04.

High Accuracy

For high accuracy, the module incorporates a Sigma- Delta converter which can provide new analog input values for each channel every 100 milliseconds.

Visual Indicators

Light-emitting diodes (LEDs) incorporated into the front of the module provide visual indication of the module's operational status, and communication activity on the channels.

Easy Removal/Replacement

The module can be removed/replaced without removing field device termination cabling, power, or communications cabling.

Fieldbus Communication

A Fieldbus Communication Module or a Control Processor interfaces the redundant 2 Mbps module Fieldbus used by the FBMs. The FBM214b module accepts communication from either path (A or B) of the redundant 2 Mbps fieldbus. If one path is unsuccessful or is switched off at the system level, the module continues communication over the active path.

The use of an external power supply common to two or more loops requires a Cable Balun Module to maintain communication signal line balance.

Termination Assemblies

Field input signals connect to the FBM subsystem via DIN rail mounted Termination Assemblies (TAs). The TA used with the FBM214b is described in Termination Assemblies and Cables, page 11.

Configuration Tools

The Compact FBM214b provides sufficient loop resistance to allow use of the HART Hand-Held Terminal or PC20 Intelligent Field Device Configurator (IFDC).

Modular Baseplate Mounting

The module mounts on a modular baseplate which accommodates up to four or eight FBMs. The modular baseplate is either DIN rail mounted or rack mounted, and includes signal connectors for redundant fieldbus, redundant independent DC power, and termination cables.

Cable Balun Module

The Cable Balun module is used to maintain digital communication line balance for HART Transmitter to FBM loops that are powered from a common external power supply. This powering effectively connects one line of each loop together. Without the Baluns, in each loop so powered, the common connection at the external power supply would cause near end crosstalk at the system end of the loop wiring cable. Loops using FBM internal power source do not require Baluns.

The Cable Balun module contains multiple Baluns. One Balun segment is interconnected in each externally powered loop (see Cable Balun Module). There is one Cable Balun module for four channels.

Cable Balun Module

Module Model	Module Part No.	No. of Baluns in the Module
CBM-4	RH903SV	4

Cable Balun Module

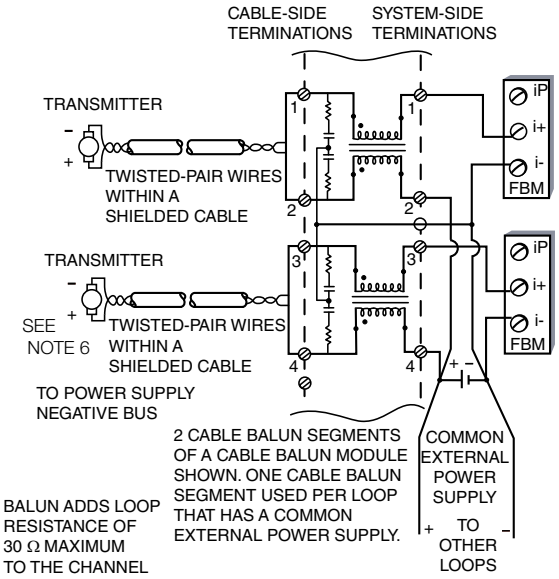

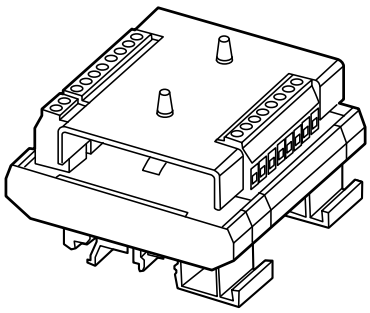

CABLE BALUN MODULE

NOTES:

1. For detailed information on balun use and installation, see *System Equipment Installation* (B0193AC).
2. Cable balun used only when multiple loops are connected to a common power supply. The FBM negative terminals connect directly to the minus (-) terminal of the power supply. The balun system side negative (-) terminals (2, 4, 6, and 8) connect to the power supply positive terminals when there are 4 (maximum) power loops.
3. For hazardous environments, install an intrinsic safety barrier such as an MTL 787S+ between the balun wiring to limit the amount of energy in the wiring.
4. A user-supplied capacitor can be installed across the external power supply(ies) to shunt AC power.
5. The external power supply can be redundant power supplies in parallel.
6. For this transmitter connection, use twisted-pair wiring inside a shielded cable with the shield grounded at the Foxboro DCS end.

Functional Specifications

Field Device Channels	• Supported HART Instruments: HART instruments compliant to Version 5, 6, or 7 of the HART specifications may be used • Interface: 8 individually isolated channels • Communication to the Device: Point-to-point, master/slave, asynchronous, half-duplex, at 1200 baud • Detected Error Checking: Parity on each byte, and one CRC check byte • Speed: 2 messages per second • Fastest Allowed ECB Block Period: 100 msec - However, we recommend that you see the *Sizing Guidelines and Excel Workbook* appropriate for your Control Processor to determine the optimal loading for a 100 msec Block Processing Cycle (BPC) • Maximum Distance (FBM214b to Field Device): Meets HART FSK physical layer specification HCF_SPEC-54, Revision 8.1 [up to 3,030 m (10,000 ft)] **NOTE:** The maximum allowable distance decreases when the loop is operated through an intrinsic safety barrier. The maximum distance of the field device from the FBM is a function of compliance voltage, wire gauge and voltage drop at the device. • Internal Loop Supply Compliance Voltage at Termination Assembly: 18.5 VDC minimum at 20.5 mA • Current Inputs: ◦ Sense Resistor: 61.5 Ω nominal ◦ Total Input Resistance: 280 Ω nominal ◦ Accuracy (Includes Nonlinearity): ±0.03% of full scale ◦ Temperature Coefficient: 50 ppm/ºC ◦ Resolution: 15 bits ◦ Update Rate: 100 ms ◦ Integration Time: 500 ms ◦ Common Mode Rejection: >100 dB at 50 or 60 Hz ◦ Normal Mode Rejection: >35 dB at 50 or 60 Hz

<table>
<tr><td>Field Device Channels (Cont.)</td><td>

Input Resistance Including Termination Assembly:

Externally Powered:
282 Ω
Internally Powered:
302 Ω

Loop Power Supply Protection:
The Compact FBM214b provides an individually isolated current limited loop supply for each channel. All input loop supplies are limited by design to less than 37 mA.
FBM Internal Power For Field Device:
Per channel isolated 24 VDC ±10% supply. Loop supply output impedance is 20 Ω including the termination assembly.
I/A Series®/Control Core Services:
Requires I/A Series software v8.2 to v8.8 or Control Core Services v9.0 or later.
Isolation:
The individual channel inputs and loop supplies are galvanically isolated from each other, ground and module logic. The module’s isolation is designed to withstand, without damage, a common mode potential of 600 VAC applied for one minute between the isolated input circuits and ground, or between a given channel and any other channel.

⚠⚠DANGER
HAZARD OF ELECTRIC SHOCK, EXPLOSION, OR ARC FLASH
Although the module can withstand a maximum of 600 VAC applied for one minute between any channel, DO NOT apply voltages beyond the published input ranges. The channels are NOT intended for permanent connection to hazardous voltage circuits. Understand that connection of these channels to voltages greater than 30 VAC or 60 VDC violates electrical safety code requirements and may expose users to electric shock.
Failure to follow these instructions will result in death or serious injury.
</td></tr>
<tr><td>Fieldbus Communication</td><td>Communicates with its associated FCM or FCP via the redundant 2 Mbps module Fieldbus.</td></tr>
<tr><td>Power Requirements</td><td>

Input Voltage Range (Redundant):
24 VDC +5% -10%
Consumption:
8.4 W (maximum)
Heat Dissipation:
5.6 W (maximum)

</td></tr>
<tr><td>Regulatory Compliance: Electromagnetic Compatibility (EMC)</td><td>

European EMC Directive 2004/108/EC (Prior to April 20, 2016) and 2014/30/EU (Beginning April 20, 2016):
Meets: EN61326-1:2013 Class A Emissions and Industrial Immunity Levels

</td></tr>
</table>

Regulatory Compliance: Product Safety	• *Underwriters Laboratories (UL) for U.S. and Canada*: UL/UL-C listed as suitable for use in UL/ULC listed Class I, Groups A-D; Division 2; temperature code T4 enclosure based systems when connected to specified Foxboro DCS processor modules as described in the *Standard and Compact 200 Series Subsystem User's Guide* (B0400FA). Communications circuits also meet the requirements for Class 2 as defined in Article 725 of the National Electrical Code (NFPA No.70) and Section 16 of the Canadian Electrical Code (CSA C22.1). Conditions for use are as specified in the*Standard and Compact 200 Series Subsystem User's Guide (B0400FA)*. • *European Low Voltage Directive 2006/95/EC (Prior to April 20, 2016) and 2014/35/EU (Beginning April 20, 2016) and Explosive Atmospheres (ATEX) directive 94/9/EC (Prior to April 20, 2016) and 2014/34/EU (Beginning April 20, 2016)*: DEMKO certified as Ex nA IIC T4 for use in certified Zone 2 enclosure when connected to specified I/A Series processor modules as described in the Standard and Compact 200 Series Subsystem User's Guide (B0400FA). Also, see Table 2, page 12.
RoHS Compliance	Complies with European RoHS Directive 2011/65/EU, including amending Directives 2015/863 and 2017/2102.
IECEx Certification	IECEx Certified
Calibration Requirements	Calibration of the module or termination assembly is not required.

Environmental Specifications

	Operating	Storage
Temperature	• Module: -20 to +70°C (-4 to +158°F) • Termination Assembly: -20 to +70°C (-4 to +158°F)	-40 to +70°C (-40 to +158°F)
Relative Humidity	5 to 95% (noncondensing)	5 to 95% (noncondensing)
Altitude	-300 to +3,000 m (-1,000 to +10,000 ft)	-300 to +12,000 m (-1,000 to +40,000 ft)
Contamination	Suitable for use in Class G3 (Harsh) environments as defined in ISA Standard S71.04, based on exposure testing according to EIA Standard 364-65, Class III.	
Vibration	0.75g from 5 to 500 Hz	

NOTE: The environmental limits of this module may be enhanced by the type of enclosure containing the module. See the applicable Product Specification Sheet (PSS) that describes the type of enclosure to be used.

Physical Specifications

Mounting	• Module: FBM214b mounts on a modular baseplate. The baseplate can be mounted on a horizontal DIN rail (horizontally or vertically), or horizontally on a 19-inch rack using a mounting kit. Alternatively, the modules mount on a 100 Series conversion mounting structure. See *Standard 200 Series Baseplates* (PSS 41H-2SBASPLT) or *100 Series Conversion Mounting Structures* (PSS 41H-2W8) for details. • Termination Assembly (TA): The TA mounts on a DIN rail and accommodates multiple DIN rail styles including 32 mm (1.26 in) and 35 mm (1.38 in).
Mass	• Module: 284 g (10 oz) approximate • Termination Assembly: Compression: 181 g (0.40 lb) approximate
Dimensions - Module	• Height: 102 mm (4 in) 114 mm (4.5 in) including mounting lugs • Width: 45 mm (1.75 in) • Depth: 104 mm (4.11 in)
Dimensions - Termination Assemblies	See Dimensions - Nominal, page 14.
Part Numbers	• FBM214b Module: RH927AH • Termination Assemblies: See Functional Specifications - Termination Assemblies, page 12.
Termination Cables	• Cable Lengths: Up to 30 m (98 ft) • Cable Materials: Polyurethane or Low Smoke Zero Halogen (LSZH) • Termination Cable Type: Type 1 — See Table 3, page 13 • Cable Connection — TA: ◦ FBM Baseplate End: 37-pin D-subminiature ◦ Termination Assembly End: 25-pin D-subminiature
Field Termination Connections	• Compression—Type Accepted Wiring Sizes: ◦ Solid/Stranded/AWG: 0.2 to 4 mm^2/0.2 to 2.5 mm^2/24 to 12 AWG ◦ Stranded with Ferrules: 0.2 to 2.5 mm^2 with or without plastic collar

Termination Assemblies and Cables

Field input signals connect to the FBM subsystem via DIN rail mounted Termination Assemblies (TAs). The TA for the FBM214b is available in Polyamide (PA) material with compression screw terminations.

See the following Functional Specifications - Termination Assemblies, page 12 for the TAs used with the FBM214b.

The FBM214b provides sufficient loop resistance to allow use of the HART Hand-Held Terminal or PC20 Intelligent Field Device Configurator.

A removable termination cable connects the DIN rail mounted TA to the FBM via a field connector on the baseplate in which the FBM is installed. Termination cables are available in these materials:

- Polyurethane
- Low Smoke Zero Halogen (LSZH)

Termination cables are available in a variety of lengths, up to 30 meters (98 feet), allowing the TA to be mounted in either the enclosure or in an adjacent enclosure. See Table 3, page 13 for a list of termination cables used with the TAs for the FBM214b.

Functional Specifications - Termination Assemblies

FBM Type	Input Signal	TA Part Number	Termination Type[b]	TA Cable Type[c]	TA Cert. Type[d]
		PA[a]			
FBM214b	8 input channels, 4 to 20 mA analog signal, alone or with HART signal superimposed	RH924JH	C	1	1 2

(a) PA is polyamide rated from -20 to +70°C (-4 to +158°F).

(b) C = Termination Assembly (TA) with compression terminals; RL = TA with ring lug terminals.

(c) See Cable Types and Part Numbers, page 13 for cable part numbers.

(d) See Certification for Termination Assemblies for TA certification definitions.

Certification for Termination Assemblies

Type	Certification[a]
Type 1	TAs are UL/UL-C listed as suitable for use in Class I; Groups A-D; Division 2 temperature code T4 hazardous locations. They are DEMKO certified Ex nA IIC T4 for use in Zone 2 potentially explosive atmospheres.
Type 2	TAs are UL/UL-C listed as associated apparatus for supplying non-incendive field circuits Class I; Groups A-D; Division 2 hazardous locations when connected to specified 200 Series FBMs and field circuits meeting entity parameter constraints specified in *Standard and Compact 200 Series Subsystem User's Guide* (B0400FA). They are also DEMKO certified as associated apparatus for supplying field circuits for Group IIC, Zone 2 potentially explosive atmospheres. Field circuits are also Class 2 limited energy (60 VDC, 30 VAC, 100 VA or less) if customer-supplied equipment meets Class 2 limits.

(a) All TAs are UL/UL-C listed to comply with applicable ordinary location safety standards for fire and shock hazards. Hazardous location types comply with ATEX directive for II 3 G use. They also comply with the requirements of the European Low Voltage Directive. All listings/certifications require installation and use within the constraints specified in *Standard and Compact 200 Series Subsystem User's Guide* (B0400FA) and the conditions stated in UL and DEMKO reports.

Cable Types and Part Numbers

Cable Length m (ft)	Type 1 P/PVC[a]	Type 1 LSZH[b]
0.5 (1.6)	RH916DA	RH928AA
1.0 (3.2)	RH916DB	RH928AB
2.0 (6.6)	RH931RM	RH928AC
3.0 (9.8)	RH916DC	RH928AD
5.0 (16.4)	RH916DD	RH928AE
10.0 (32.8)	RH916DE	RH928AF
15.0 (49.2)	RH916DF	RH928AG
20.0 (65.6)	RH916DG	RH928AH
25.0 (82.0)	RH916DH	RH928AJ
30.0 (98.4)	RH916DJ	RH928AK

(a) P/PVC is polyurethane outer jacket and semi-rigid PVC primary conductor insulation.

(b) Low smoke zero halogen or low smoke free of halogen (LSZH) is a material classification used for cable jacketing. LSZH is composed of thermoplastic or thermoset compounds that emit limited smoke and no halogen when exposed to high sources of heat. Temperature range: -40 to +105°C (-40 to +221°F).

Use of Termination Assemblies in 100 Series Upgrade Subsystem

When an FBM214b is used to replace a 100 Series FBM01 (connected to a HART device), the FBM214b may use the RH924JH (supersedes P0924JH) termination assembly for the FBM01's field I/O wiring. Alternatively, the FBM214b can accept this field wiring through a Termination Assembly Adapter (TAA) instead of a termination assembly. This is discussed in *Termination Assembly Adapter Modules for 100 Series Upgrade* (PSS 31H-2W4).

Dimensions - Nominal

[mm]
in

Compression Termination Assembly - RH924JH

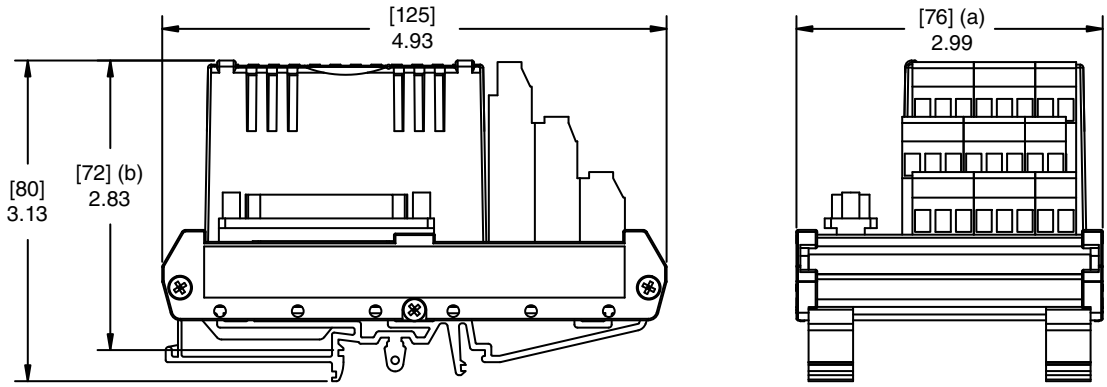

(a) Overall width – for determining DIN rail loading.
(b) Height above DIN rail (add to DIN rail height for total).

Related Documents

Document Number	Description
PSS 31H-2SOV	*Standard 200 Series Subsystem Overview*
PSS 31H-2W100	*100 Series Fieldbus Module Upgrade Subsystem Overview*
PSS 41H-2CERTS	*Standard and Compact 200 Series I/O, Agency Certifications*
PSS 31H-2W4	*Termination Assembly Adapter Modules for 100 Series Upgrade*
PSS 41H-2SBASPLT	*Standard and Compact 200 Series Modular Baseplates*
PSS 41H-2W8	*100 Series Conversion Mounting Structures*
PSS 41S-3FCPICS	*Field Control Processor 280 (FCP280) Integrated Control Software*
PSS 41S-10FDMHRT	*Field Device Expert for HART Devices Control and I/O*
B0400FA	*Standard and Compact 200 Series Subsystem User's Guide*

Proposition 65



WARNING: This product can expose you to chemicals including lead and lead compounds, which are known to the State of California to cause cancer and birth defects or other reproductive harm. For more information go to www.P65Warnings.ca.gov.

Schneider Electric Systems USA, Inc.
70 Mechanic Street
Foxboro, Massachusetts 02035–2040
United States of America

Global Customer Support: https://pasupport.se.com

As standards, specifications, and design change from time to time,
please ask for confirmation of the information given in this publication.

© 2015–2025 Schneider Electric. All rights reserved.

PSS 41H-2S214, Rev C