Foxboro™ DCS

FBM212 Thermocouple/mV Differential Input Module

PSS 41H-2S212

Product Specification

May 2025



https://www.se.com

Legal Information

The information provided in this document contains general descriptions, technical characteristics and/or recommendations related to products/solutions.

This document is not intended as a substitute for a detailed study or operational and site-specific development or schematic plan. It is not to be used for determining suitability or reliability of the products/solutions for specific user applications. It is the duty of any such user to perform or have any professional expert of its choice (integrator, specifier or the like) perform the appropriate and comprehensive risk analysis, evaluation and testing of the products/solutions with respect to the relevant specific application or use thereof.

The Schneider Electric brand and any trademarks of Schneider Electric SE and its subsidiaries referred to in this document are the property of Schneider Electric SE or its subsidiaries. All other brands may be trademarks of their respective owner.

This document and its content are protected under applicable copyright laws and provided for informative use only. No part of this document may be reproduced or transmitted in any form or by any means (electronic, mechanical, photocopying, recording, or otherwise), for any purpose, without the prior written permission of Schneider Electric.

Schneider Electric does not grant any right or license for commercial use of the document or its content, except for a non-exclusive and personal license to consult it on an "as is" basis.

Schneider Electric reserves the right to make changes or updates with respect to or in the content of this document or the format thereof, at any time without notice.

To the extent permitted by applicable law, no responsibility or liability is assumed by Schneider Electric and its subsidiaries for any errors or omissions in the informational content of this document, as well as any non-intended use or misuse of the content thereof.

Overview

The Differential Thermocouple/mV Input Module (FBM212) contains 14 differentially isolated thermocouple input channels, and one differentially isolated RTD reference junction temperature compensation channel (for terminal temperature sensing). Each thermocouple/mV channel accepts standard thermocouples for various temperature ranges, and each provides thermocouple burnout detection (up-scale). Each channel has a differential input to allow voltage differences between channels without introducing detected errors.

The module performs the signal conversion required to interface the electrical input signals from the field sensors to the optionally redundant Fieldbus. It executes an analog input application program, which provides configurable options for Conversion Time and Rate of Change Limits.

Features

- 14 channels for input of thermocouple signals
- 1 isolated RTD reference junction compensation channel (for terminal temperature sensing)
- Each channel has a differential input
- Rugged design suitable for enclosure in Class G3 (harsh) environments
- Execution of an analog input application program that provides conversion time and configurable options for Rate of Change Limits
- High accuracy achieved by sigma-delta data conversions for each channel
- Termination Assemblies (TAs) for locally or remotely connecting field wiring to the FBM212

High Accuracy

For high accuracy, the module incorporates a multiplexed Sigma-Delta converter, which can provide new analog input readings every 500 ms, and a configurable integration period to remove any process noise and power line frequencies. Each update time period, the Foxboro DCS Fieldbus Module (FBM) converts each analog input to a digital value, averages these values over the time period and provides the averaged value to the controller.

Standard Design

FBM212 has a rugged extruded aluminum exterior for physical protection of the circuits. Enclosures specially designed for mounting the FBMs provide various levels of environmental protection, up to harsh environments, per ISA Standard S71.04.

Visual Indicators

LEDs incorporated into the front of the module provide visual status indications.

Easy Removal/Replacement

The module can be removed/replaced without removing field device termination cabling, power, or communication cabling.

Fieldbus Communication

A Fieldbus Communications Module or a Control Processor interfaces to the redundant 2 Mbps module Fieldbus used by the FBMs. The FBM212 accepts communication from either path (A or B) of the 2 Mbps Fieldbus. If one path is unsuccessful or is switched at the system level, the module continues communication over the active path.

Modular Baseplate Mounting

The module mounts on a 200 Series baseplate, which accommodates up to four or eight FBMs. The Modular Baseplate is either DIN rail mounted or rack mounted, and includes signal connectors for redundant Fieldbus, redundant independent DC power, and termination cables. For applications that require CE certification, the baseplate and power supplies must be installed in a metal rack. Open wall mounting in that case is not allowed.

Termination Assemblies

Field I/O signals connect to the FBM subsystem via DIN rail mounted TAs. The TAs used with the FBM212 are described in Termination Assemblies and Cables, page 10.

Functional Specifications

Input	14 group isolated differential thermocouple/mV input channels and one reference junction temperature compensation channel.
Input Range	-10.5 to +69.5 mV DC (-10.5 to +69.5 mV DC equals 0 to 64000 raw counts. Inputs of 71.419 mV DC equals 65535 raw counts (full range of module)).
Reference Junction	3-wire 100 ohm platinum RTD (IEC 751, Class B) is internally provided at the termination assembly. Channel 15 is the cold junction compensation channel. The RTD is in the TA and is not customer accessible.
Accuracy	• Millivolt Input: ±0.03% of span (±27 µV) at 25°C • RTD Channel: ±0.03% of span • RTD Reference Junction Conformity: ±0.25°C • Thermocouple Conformity: ±0.25°C • Accuracy Temperature Coefficient: ±50 ppm/°C • RTD Reference Junction Measurement Accuracy[(b)]: ±0.50°C (When using the RTD internal to the Foxboro-supplied termination blocks) • Differential Input Impedance: 10 MΩ • Common Mode Voltage: ±2.5 VDC or peak AC between channels
Input Signal A/D Conversion	Each channel performs A/D signal conversion using a multiplexed Sigma-Delta converter.
Input Conversion Time	Software configurable
Input Open Circuit Voltage	2.5 VDC (mV channels)
Typical Thermocouple Types	B, E, J, K, N, R, S, T, and other millivolt signals. The thermocouples cannot be grounded. For grounded thermocouple applications, the FBM202 and its associated termination assembly must be used.
Input Channel Isolation	Each channel has a differential input to allow voltage differences between channels without introducing detected errors. The channels are not galvanically isolated from each other, but are galvanically isolated from ground and module logic. The module withstands, without damage, a potential of 600 VAC applied for one minute between the differentially isolated channels and ground.

	⚠⚠DANGER **HAZARD OF ELECTRIC SHOCK, EXPLOSION, OR ARC FLASH** Although the module can withstand a maximum of 600 VAC applied for one minute between any channel, DO NOT apply voltages beyond the published input ranges. The channels are NOT intended for permanent connection to hazardous voltage circuits. Understand that connection of these channels to voltages greater than 30 VAC or 60 VDC violates electrical safety code requirements and may expose users to electric shock. **Failure to follow these instructions will result in death or serious injury.**
Communication	Communicates with its associated FCM or FCP via the redundant 2 Mbps module Fieldbus.
Power Requirements	• Input Voltage Range (Redundant): 24 VDC +5%, -10% • Consumption: 3 W (maximum) at 24 VDC • Heat Dissipation: 3 W (maximum) at 24 VDC
Calibration Requirements	Calibration of the module and termination assembly is not required.
Regulatory Compliance: Electromagnetic Compatibility (EMC)	• *European EMC Directive 2004/108/EC (Prior to April 20, 2016) and 2014/30/EU (Beginning April 20, 2016)*: Meets: EN61326-1:2013 Class A Emissions and Industrial Immunity Levels
Regulatory Compliance: Product Safety	• *Underwriters Laboratories (UL) for U.S. and Canada*: UL/UL-C listed as suitable for use in UL/ULC listed Class I, Groups A-D; Division 2; temperature code T4 enclosure based systems when connected to specified EcoStruxure™ Foxboro DCS processor modules. Communications circuits also meet the requirements for Class 2 as defined in Article 725 of the National Electrical Code (NFPA No.70) and Section 16 of the Canadian Electrical Code (CSA C22.1). For more information, see *Standard and Compact 200 Series Subsystem User's Guide* (B0400FA). • *European Low Voltage Directive 2006/95/EC (Prior to April 20, 2016) and 2014/35/EU (Beginning April 20, 2016) and Explosive Atmospheres (ATEX) directive 94/9/EC (Prior to April 20, 2016) and 2014/34/EU (Beginning April 20, 2016)*: DEMKO certified as Ex nA IIC T4 for use in certified Zone 2 enclosure when connected to specified processor modules as described in the *Standard and Compact 200 Series Subsystem User's Guide (B0400FA).* Also see Table 1, page 11.
RoHS Compliance	Complies with European RoHS Directive 2011/65/EU, including amending Directives 2015/863 and 2017/2102.
IECEx Certification	IECEx Certified

Environmental Specifications

	Operating	Storage
Temperature	• Module: -20 to +70°C (-4 to + 158°F) • Termination Assembly - PA: -20 to +70°C (-4 to +158°F)	-40 to +70°C (-40 to +158°F)
Relative Humidity	5 to 95% (noncondensing)	5 to 95% (noncondensing)
Altitude	-300 to +3,000 m (-1,000 to +10,000 ft)	-300 to +12,000 m (-1,000 to +40,000 ft)
Contamination	Suitable for use in Class G3 (Harsh) environments as defined in ISA Standard S71.04, based on exposure testing according to EIA Standard 364-65, Class III.	
Vibration	0.75g from 5 to 500 Hz	

NOTE: The environmental limits of this module may be enhanced by the type of enclosure containing the module. See the applicable Product Specification Sheet (PSS) that describes the specific type of enclosure to be used.

Physical Specifications

Mounting	• Module: FBM212 mounts on a baseplate. The baseplate can be mounted on a DIN rail (horizontally or vertically), or horizontally on a 19-inch rack using a mounting kit. See *Standard 200 Series Baseplates* (PSS 41H-2SBASPLT) for details. For applications which require CE certification, the baseplate and power supplies must be installed in a metal rack. Open wall mounting in that case is not allowed. • Termination Assembly: The TA mounts on a DIN rail and accommodates multiple DIN rail styles including 32 mm (1.26 in) and 35 mm 1.38 in).
Weight	• Module: 284 g (10 oz) approximate • Termination Assemblies: Compression: 272 g (0.60 lb, approximate)
Dimensions - Module	• Height: 102 mm (4 in),114 mm (4.5 in) including mounting lugs • Width: 45 mm (1.75 in) • Depth: 104 mm (4.11 in)
Dimensions - Termination Assemblies	See Dimensions - Nominal, page 13.
Part Numbers	• Compact FBM212 Module: RH914XL • Termination Assemblies: See Functional Specifications - Termination Assemblies, page 11.
Termination Cables	• Cable Lengths: Up to 30 m (98 ft) • Cable Materials: Polyurethane or Low Smoke Zero Halogen (LSZH) • Termination Cable Type: Type 1 — See Table 2, page 12. • Cable Connection: 37-pin male D-subminiature

Construction - Termination Assembly	• Material: Polyamide (PA), compression • Terminal Blocks: Inputs - 2 tiers, 14 positions
Field Termination Connections	• Compression Accepted Wiring Sizes: ◦ Solid/Stranded/AWG: 0.2 to 4 mm^2/0.2 to 2.5 mm^2/24 to 12 AWG ◦ Stranded with Ferrules: 0.2 to 2.5 mm^2 with or without plastic collar

Termination Assemblies and Cables

Field I/O signals connect to the FBM subsystem via DIN rail mounted termination assemblies, which are electrically passive. TAs for the FBM212 module are available in these forms:

- Compression screw type using Polyamide (PA) material

Each FBM212 Termination Assembly and its associated termination cable provide feedthrough connection between fourteen 2-wire thermocouple/mV analog input signals and the FBM212 Differential Thermocouple/mV Input Module. The thermocouples cannot be grounded. For grounded thermocouple applications, the FBM202 and its associated termination assembly must be used.

Reference junction temperature compensation is provided by an isolated resistance temperature detector (RTD) that is integral to the termination assembly.

See Functional Specifications - Termination Assemblies, page 11 for a list of TAs used with the FBM212 module.

A removable termination cable connects the DIN rail mounted TA to the FBM via a field connector on the baseplate in which the FBM is installed. Termination cables are available in the following materials:

- Polyurethane
- Low Smoke Zero Halogen (LSZH)

Termination cables are available in a variety of lengths, up to 30 meters (98 feet), allowing the termination assembly to be mounted in either the enclosure or in an adjacent enclosure. See Table 2, page 12 for a list of termination cables used with the TAs for the FBM212 module.

Functional Specifications - Termination Assemblies

FBM Type	Input Signal	TA Part Number[a]	Termination Type[b]	TA Cable Type[c]	TA Cert. Type[d]
		PA			
FBM212	Fourteen isolated and independent thermocouple/ mV channels, passive feedthrough with FBM212 channel isolation with one 4-wire 100 ohm platinum RTD (IEC 751, Class B)	RH916BV	C	4	1,4

(a) PA is polyamide rated from -20 to +70°C (-4 to +158°F).

(b) C = TA with compression terminals.

(c) See Table 2, page 12 for cable part numbers.

(d) See Table 1, page 11 for Termination Assembly certification definitions.

Table 1 - Certification for Termination Assemblies

Type	Certification
Type 1	TAs are UL/UL-C listed as suitable for use in Class I; Groups A-D; Division 2 temperature code T4 hazardous locations. They are DEMKO certified Ex nA IIC T4 for use in Zone 2 potentially explosive atmospheres.
Type 4	All field circuits are Class 2 limited energy (60 VDC, 30 VAC, 100 VA or less) if customer-supplied equipment meets Class 2 limits.

Table 2 - Cable Types and Part Numbers

Cable Length m (ft)	Type 4 P/PVC[a]	Type 4 LSZH[b]
0.5 (1.6)	RH916FG	RH928BA
1.0 (3.2)	RH916FH	RH928BB
2.0 (6.6)	RH931RQ	RH928BC
3.0 (9.8)	RH916FJ	RH928BD
5.0 (16.4)	RH916FK	RH928BE
10.0 (32.8)	RH916FL	RH928BF
15.0 (49.2)	RH916FM	RH928BG
20.0 (65.6)	RH916FN	RH928BH
25.0 (82.0)	RH916FP	RH928BJ
30.0 (98.4)	RH916FQ	RH928BK

[a] P/PVC is polyurethane outer jacket and semi-rigid PVC primary conductor insulation. PVC is rated from -20 to +50°C (-4 to +122°F).

[b] Low smoke zero halogen or low smoke free of halogen (LSZH) is a material classification used for cable jacketing. LSZH is composed of thermoplastic or thermoset compounds that emit limited smoke and no halogen when exposed to high sources of heat. Temperature range: - 40 to +105°C (-40 to +221°F).

Dimensions - Nominal

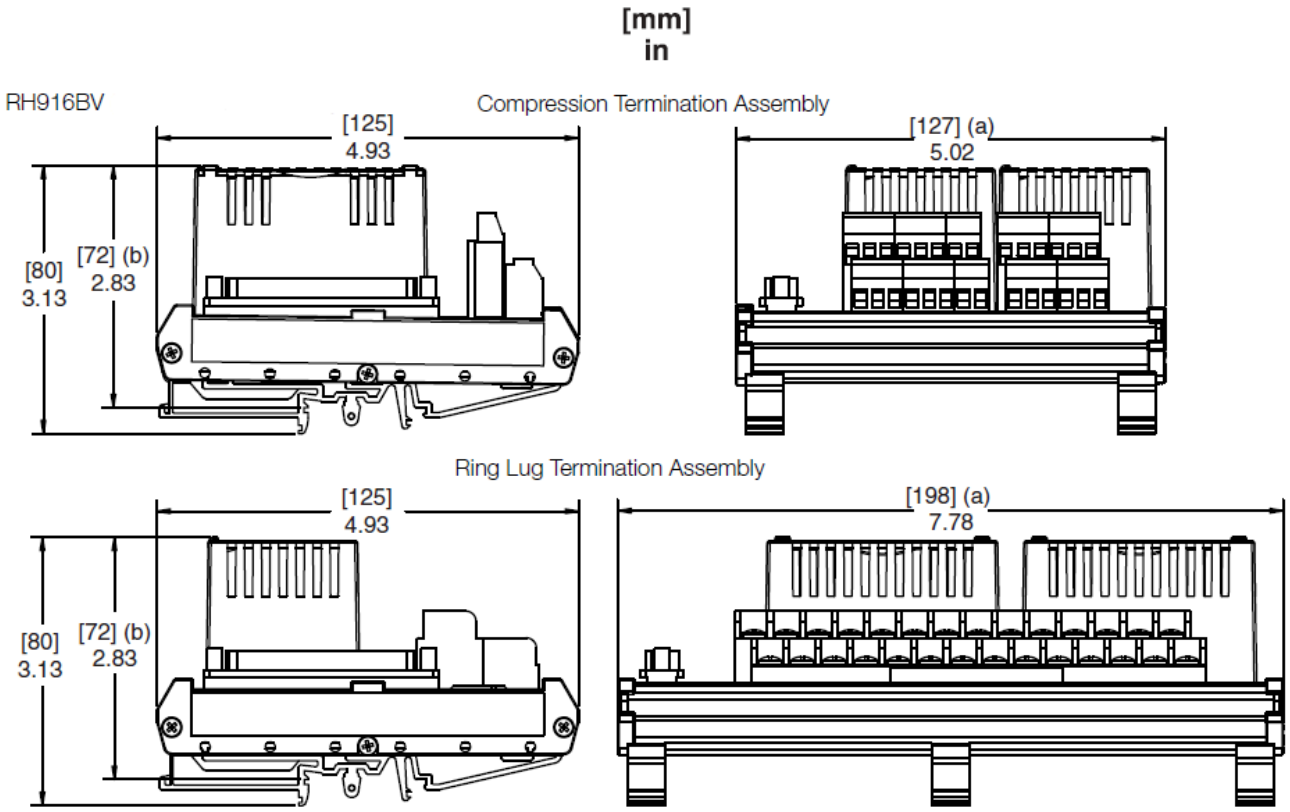

(a) Overall width – for determining DIN rail loading.
(b) Height above DIN rail (add to DIN rail height for total).

Related Documents

Document Number	Description
PSS 41H-2SOV	*Standard 200 Series Subsystem Overview*
PSS 41H-2CERTS	*Standard and Compact 200 Series I/O - Agency Certification*
PSS 41H-2SBASPLT	*Standard 200 Series Baseplates*
PSS 41S-3FCPICS	*Field Control Processor 280 (CP280) Integrated Control Software*
B0400FA	*Standard and Compact 200 Series Subsystem User's Guide*

Proposition 65

WARNING: This product can expose you to chemicals including lead and lead compounds, which are known to the State of California to cause cancer and birth defects or other reproductive harm. For more information go to www.P65Warnings.ca.gov.

Schneider Electric Systems USA, Inc.
70 Mechanic Street
Foxboro, Massachusetts 02035–2040
United States of America

Global Customer Support: https://pasupport.se.com

As standards, specifications, and design change from time to time, please ask for confirmation of the information given in this publication.

© 2015–2025 Schneider Electric. All rights reserved.

PSS 41H-2S212, Rev B