Foxboro™ DCS

Field Mounted Intelligent Enclosure

PSS 41H-2I20

Product Specification

October 2025



https://www.se.com

Legal Information

The information provided in this document contains general descriptions, technical characteristics and/or recommendations related to products/solutions.

This document is not intended as a substitute for a detailed study or operational and site-specific development or schematic plan. It is not to be used for determining suitability or reliability of the products/solutions for specific user applications. It is the duty of any such user to perform or have any professional expert of its choice (integrator, specifier or the like) perform the appropriate and comprehensive risk analysis, evaluation and testing of the products/solutions with respect to the relevant specific application or use thereof.

The Schneider Electric brand and any trademarks of Schneider Electric SE and its subsidiaries referred to in this document are the property of Schneider Electric SE or its subsidiaries. All other brands may be trademarks of their respective owner.

This document and its content are protected under applicable copyright laws and provided for informative use only. No part of this document may be reproduced or transmitted in any form or by any means (electronic, mechanical, photocopying, recording, or otherwise), for any purpose, without the prior written permission of Schneider Electric.

Schneider Electric does not grant any right or license for commercial use of the document or its content, except for a non-exclusive and personal license to consult it on an "as is" basis.

Schneider Electric reserves the right to make changes or updates with respect to or in the content of this document or the format thereof, at any time without notice.

To the extent permitted by applicable law, no responsibility or liability is assumed by Schneider Electric and its subsidiaries for any errors or omissions in the informational content of this document, as well as any non-intended use or misuse of the content thereof.

Overview

The EcoStruxure™ Foxboro™ DCS Field Mounted Intelligent Enclosure provides an integrated solution designed to be mounted close to instruments in the field to reduce cables. The Field Mounted Enclosure includes Universal Input/Output (UIO) modules, power supplies, and Termination Assemblies (TAs) that are pre-installed and tested, and can be connected to a wide range of field devices. The enclosure design aligns with the Schneider Electric Flexible Lean Execution strategy, which focuses on reducing time lines and minimizing startup delays.

The Field Mounted Intelligent Enclosure is designed to be mounted in the field, and connects through redundant single mode fiber to the Field Control Processors located in the Equipment Room Intelligent Enclosure. For more information, see *EcoStruxure™ Foxboro™ DCS Equipment Room Intelligent Enclosure* (PSS 41H-2I30).

The enclosure supports up to 64 standard Universal I/O channels in simplex, redundant, or simplex and redundant combinations, and optionally accommodates integration of third party PLCs using simplex or redundant Field Device System Integration modules supporting Modbus TCP.

A second enclosure can be cascaded from the first enclosure using single mode fiber or copper cable, saving on communication home run cable to the equipment room.

Field cables, communication cables, and power cables enter the enclosure through cable glands or a multi-cable transit (optional) located at the bottom of the enclosure.

The channel-to-channel isolated Universal I/O Module supports DI, DO, AI, AO, HART, NAMUR, Pulse, and 1 ms SOE signal types.

Field cables terminate directly on Termination Assemblies (TAs) with signal conditioners for optional field signal processing. See Termination Assemblies and Signal Conditioners, page 8.

Terminals are provided to terminate spare field cable cores and screens. This rugged, unpainted SS316L stainless steel enclosure can be mounted in harsh environmental and hazardous areas.

Features

- Protection against harsh environments and hazardous locations:
  - NEMA® 4X/IP66 rated
  - Class G3 (harsh) environment
  - ATEX
- Universal I/O and TAs support any one of these options:
  - 64 Simplex I/O
  - 64 Redundant I/O
  - 48 Simplex and 16 Redundant I/O
- Up to 16 Universal Standard I/O modules (8 x FBM247, 16 x FBM248, or 4 x FBM248 and 6 x FBM247) that support 64 simplex, redundant, or simplex and redundant I/O Channels using TAs and signal conditioners
- Redundant Field Communication Modules (FCM2F10) for single mode fiber communication to FCP280
- Up to two Field Device System Integrator Standard modules (1 x or 2 x FBM232, 2 x FBM233) for Modbus TCP Communication
- Daisy chain from one enclosure to the next to reduce home run cables for communication and power. Alternatively, the power output used to daisy chain an enclosure can be used to provide power to a wireless field device access point installed outside of the enclosure
- Up to two Fieldbus Isolator/Repeator modules for daisy chaining enclosures using Copper (FBI200) or Fiber Optic cable (FCM2F10)
- 12-port fiber optic patch panel with ST connectors for terminating and distributing fiber-optic cables for communication to the enclosure and wireless field device access point
- Document pocket inside front door
- Door stoppers to help prevent the door from swinging or opening too widely
- 120 VAC, 230 VAC system supply
- Supports the Intelligent Commissioning Wizard, which significantly reduces commissioning effort and shortens the time to plant start-up (see *EcoStruxure™ Foxboro™ DCS Field Device Expert for HART Devices* (PSS 41S-10FDMHRT))

Environmental Protection

The enclosure provides NEMA4X/IP66 environmental protection, allowing it to be used in harsh locations.

Thermal Protection

Heat from the equipment mounted within the enclosure is convected naturally and is dissipated by the exterior surfaces of the enclosure. For operating in ambient temperatures up to 55°C (131°F), natural convection is supplemented by two redundant fans that circulate air within the sealed enclosure.

The fans and temperature within the enclosure are monitored by the Enclosure Monitoring Unit (EMU) that provides a diagnostic alarm on fan deterioration or enclosure over temperature.

Leave a minimum of 150 mm (6 in) space between adjacent cabinets or a cabinet and a wall, to allow the flow of air to cool the cabinet.

Cable Entry

Bottom cable entry for power, communication, and field cables is through customer supplied cable glands that maintain the enclosure protection classification, or optional factory fitted Multi Cable Transit (MCT).

Modular Baseplate Mounting

The enclosure contains two 8-position standard 200 Series modular baseplates for Foxboro DCS Fieldbus Modules (FBMs), and two 2-position baseplates for the FCM2F10s. These are mounted on two vertical DIN rails as shown in Enclosure Options, page 6. The FBM baseplates include signal connectors for the FBMs, redundant independent DC power connections, system cable connections, module fieldbus connections, and time synchronization connections.

For more information on the modular baseplates, see *EcoStruxure™ Foxboro™ DCS Standard 200 Series Baseplates* (PSS 41H-2SBASPLT).

Field Termination Assemblies

Termination Assemblies (TAs) are installed on the DIN rails mounted at the sides of the FBM baseplates. The Universal I/O modules are connected to the TAs with pre-installed system cables.

The TAs are supplied with redundant 24 VDC, protected by fuses that are monitored by the Fuse Monitoring Unit (FMU).

The enclosure is shipped with TAs fitted with passive feed-through signal conditioners which you can replace with the signal conditioners listed in Termination Assemblies and Signal Conditioners, page 8.

Power Distribution Architecture

The enclosure provides a redundant 24 V power system using two FPS480-24 power supplies fed by independent sources. Power wiring is routed through the bottom of the enclosure. The input power connects to the primary and secondary entry terminal blocks for main and backup power.

Electrical fuses are monitored by the Fuse Monitoring Unit (FMU) and an open fuse indication from the FMU is wired into the Enclosure Monitoring Unit (EMU) through the Alarm Distribution Assembly.

Grounding

All enclosure structural elements are integrally grounded by the enclosure design to meet the appropriate industry regulations and standards. The enclosure is equipped with two instrument earth bars. It also has a protective connection point at the outside bottom of the enclosure for customer grounding purposes. Field wiring shields can be

terminated either to the Terminal Assemblies or to the instrument ground bus bar. Spare signal wires and shields can be terminated either to the Terminal Assemblies or to the instrument ground bus bar.

Enclosure Diagnostic Alarms

The EMU provides an alarm for power supply failure detection, fuse failure detection via the FMU, door open, fan deterioration, and enclosure over temperature. The EMU provides a composite diagnostic alarm from a graduated analog signal that indicates individual alarms and is prewired to a Universal I/O module channel for indication and alarm.

Enclosure Security

The enclosure can be physically locked with a customer-supplied padlock to provide physical security. The enclosure is also fitted with a door open switch that is alarmed via the Enclosure Monitoring Unit to alert plant personnel.

Enclosure Options

The enclosure can be configured with the following options:

- 120 VAC or 230 VAC supply
- Customer supplied cable glands or factory fitted Multi Cable Transit (MCT)
- Termination Assembly selection for IS, Non-IS, and manufacturer
- 64 simplex UIO points, 64 redundant UIO points, or 48 simplex and 16 redundant UIO points
- Third party communications through FBM232 modules for simplex Ethernet or FBM233 modules for redundant Ethernet
- Fiber-optic connection to the HDLC Fieldbus using FCM2F10 modules
- Extended twinaxial connection to the HDLC Fieldbus using FBI200 modules

Figure 1 - Interior View of the Enclosure

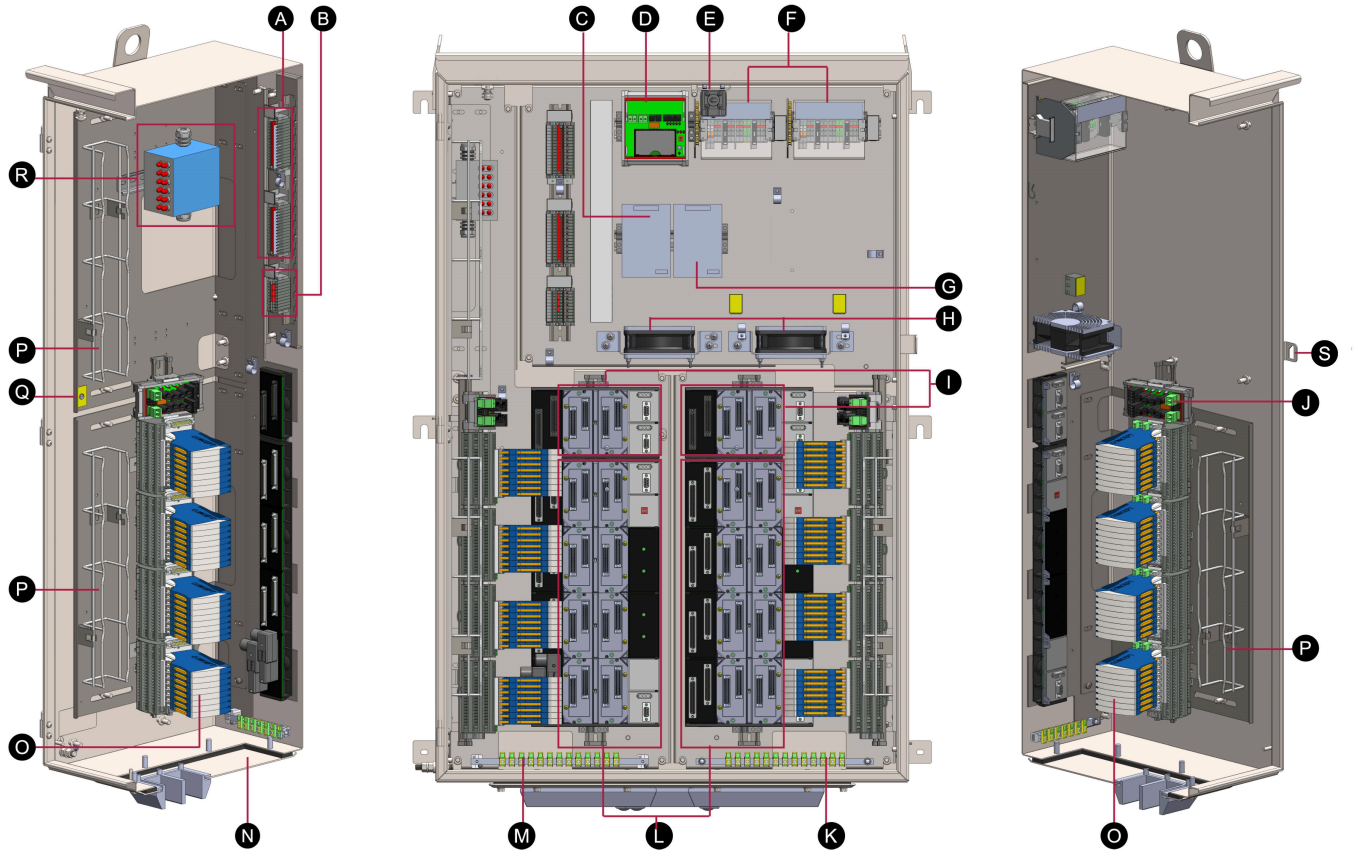

A	24 VDC Power Distribution Assembly	K	Instrument Ground Bar
B	Alarm Distribution Assembly Terminals	L	Baseplate 8-Position FBM
C	Primary Power Supply	M	Instrument Ground Bar
D	Enclosure Monitoring Unit	N	Cable Entry (Blank Gland Plate)
E	Door Open Switch	O	Termination Assemblies (Phoenix Contact shown)
F	Power Entry Terminal Blocks	P	Wire Tray, 50 mm x 50 mm x 403 mm (2 in x 2 in x 15.9 in)
G	Secondary Power Supply	Q	Electro Static Discharge Bonding Point
H	Fans for internal air circulation	R	Fiber-Optic Patch Panel
I	Baseplate 2-Position FCM	S	Lock for Customer-Supplied Padlock
J	Fuse Monitoring Unit		

Termination Assemblies and Signal Conditioners

The following tables list the Termination Assemblies and Signal Conditioners supported. You can select them as required at the time of ordering the enclosure.

Table 1 - Supported Phoenix Termination Assemblies and Signal Conditioners

Part	Phoenix Part Number	Description
Base Module - VIP/S/D25M/BASE 1-8/L/C/EX	2906595	VIPER base module (Termination Assembly), screw connection (p/n 2906595) • Shipped with IOA FEED-THRU/EX (p/n 2906598) • Replace with the IOAs below, as required
IOA AI/AO/BFI/DS/0.5A/EX	2906599	IOA, analog protection with disconnects and test points
IOA DI/DO/BFI/DS/1.0A/EX	2906600	IOA, digital protection with disconnects and test points
IOA REL 24V DO/BFI/3.0A/EX	2910153	IOA, 24 V DO relay
IOA REL 120V DO/BFI/3.0A/EX	2910154	IOA, 120 V DO relay
IOA REL 24V DI/BFI/1.0A/EX	2910155	IOA, 24 V DO relay
IOA REL 120V DI/1.0A/EX	2910157	IOA, 120 V DI relay
IOA REL 230V DO/BFI/NO/3.0A/EX	2910421	IOA, 230 V DO relay NO contact
IOA REL 230V DO/BFI/NC/3.0A/EX	2910422	IOA, 230 V DO relay NC contact
IOA REL 230V DI/1.0A/EX	2910423	IOA, 230 V DI relay

Functional Specifications

Enclosure	SS316L stainless steel field enclosure
Input Power (Redundant)	See *EcoStruxure™ Foxboro™ DCS Compact Power Supply - FPS480-24* (PSS 41H-2C480)
Maximum Dissipated Power	148 W
Maximum Input Power	480 W
Enclosure Over Temperature Alarm Setting	70°C (158°F)
Regulatory Compliance, Electromagnetic Compatibility (EMC)	• *EMC Directive 2014/30/EU*: Meets: EN 61326-1:2013 and EN 61000-6-2:2005
Product Safety	• *Underwriters Laboratories (UL) for U.S. and Canada*: UL/UL-C listed as suitable for use in UL/UL-C listed Class I, Groups A-D; Division 2; Hazardous locations when installed as described in *EcoStruxure™ Foxboro™ DCS I-Series Intelligent Enclosures Planning and Installation Guide* (B0700GX). Communications circuits also meet the requirements for Class 2 as defined in Article 725 of the National Electrical Code (NFPA No.70) and Section 16 of the Canadian Electrical Code (CSA C22.1). Conditions for use are as specified in *EcoStruxure™ Foxboro™ DCS I-Series Intelligent Enclosures Planning and Installation Guide* (B0700GX). • *European Low Voltage Directive 2014/35/EU and Explosive Atmospheres (ATEX) Directive 2014/34/EU*: II 3G Ex ic eb ec nC IIC T3 Gc II 3 D Ex tb tc IIIC T60°C Dc certified when installed as described in *EcoStruxure™ Foxboro™ DCS I-Series Intelligent Enclosures Planning and Installation Guide* (B0700GX).
RoHS Compliance	Complies with European RoHS Directive 2011/65/EU when FBM232 and FBM233 options are not fitted

Environmental Specifications

	Operating	Storage
Temperature	-20° to +55°C (-4° to +131°F) (External Ambient)	-40° to +70°C (-40° to +158°F)
Altitude	-300 to +3,000 m (-1,000 to +10,000 ft)	-300 to +12,000 m (-1,000 to +40,000 ft)
Relative Humidity	5 to 95% (noncondensing)	
Ingress Protection Ratings	NEMA 4X, IP66 (per EN 60 529/IEC 529)	
Contamination Class	Class G3 (Severe) as defined in ISA Standard, S71.04	
Enclosure Over Temperature Alarm	70° C (158° F)	
Vibration	• 2.0 to 13.2 Hz, 1.0 mm • 13.2 to 100 Hz, 0.7 g	
Sound Power Level (SWL)	47.2 dB	

Physical Specifications

Mounting	Wall mounted **⚠WARNING** **POTENTIAL RISK OF INJURY** The enclosure must be securely mounted. See *EcoStruxure™ Foxboro™ DCS I-Series Intelligent Enclosures Planning and Installation Guide* (B0700GX) for instructions to mount the enclosure. **Failure to follow these instructions can result in death, serious injury, or equipment damage.**
Weight	Up to 150 kg (up to 330 lbs)
Construction	SS316L, Unpainted
Panel Thickness	• Doors: 14 Gauge (1.8 mm) • Housing: 14 Gauge (1.8 mm) • Gland Plate: 16 Gauge (1.5 mm)
Field Termination Connections	See *EcoStruxure™ Foxboro™ DCS I-Series Intelligent Enclosures Planning and Installation Guide* (B0700GX)
Field-Wire Termination	• Termination Assemblies: Eight TAs with screw-clamp field connectors that support up to 14 Gauge (2.5 mm^2) • Wire Tray: Two wire trays 50 mm x 50 mm x 403 mm (2 in x 2 in x 15.9 in) for routing of field cables
Ground Bus Bar	• Two bus bars for instrument ground • Separate connection point (stud) for protective ground
Power Input Terminals	• Type: Screw Clamp • Wire Size: Up to 10 AWG (6 mm^2)

Dimensions-Nominal

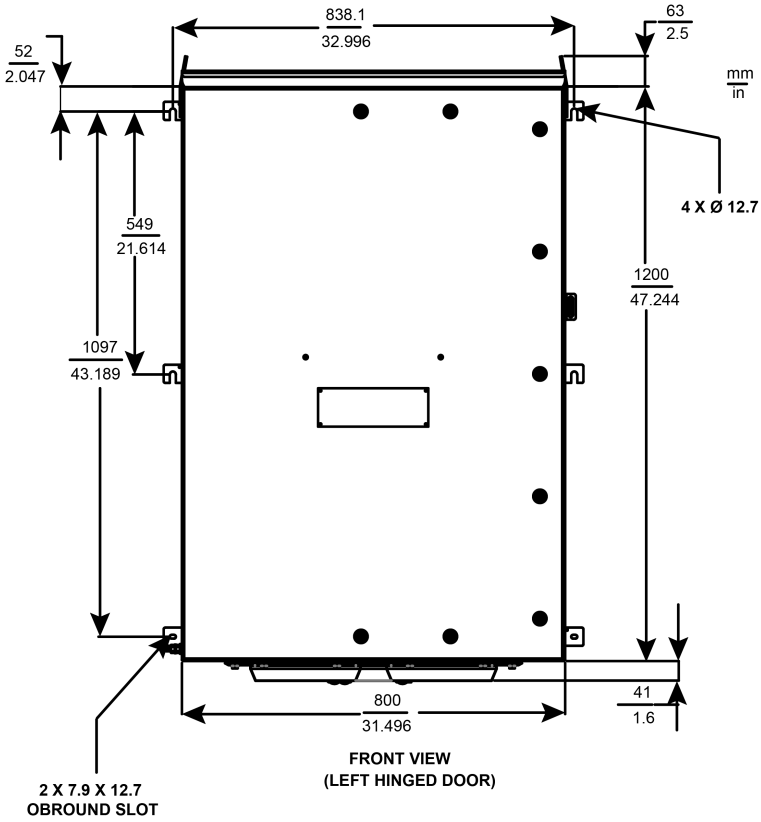

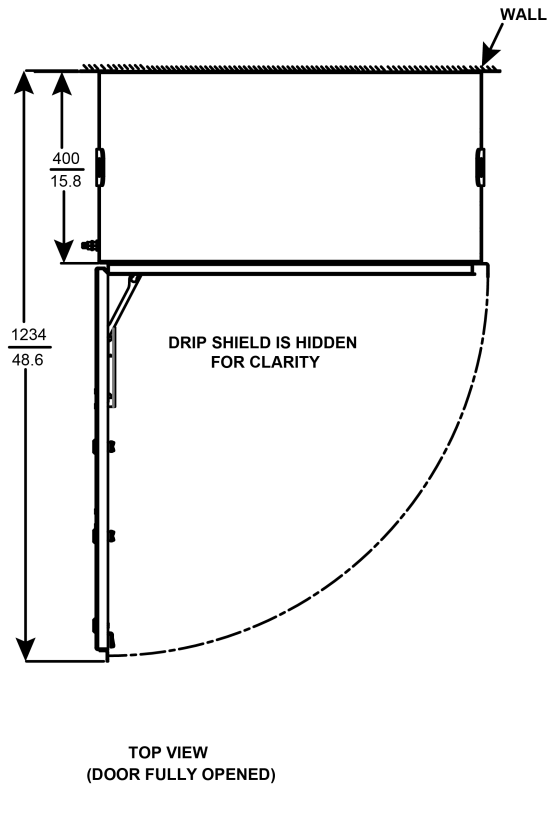

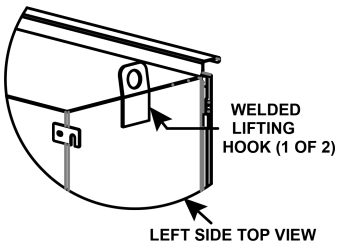

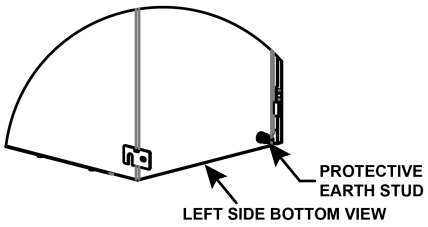

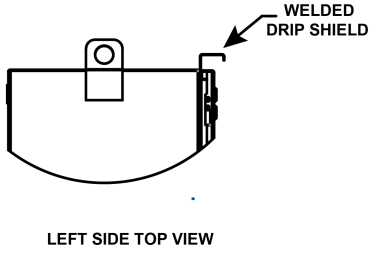

Related Documents

- *EcoStruxure™ Foxboro™ DCS Compact Power Supply - FPS480-24* (PSS 41H-2C480)
- *Environmental Conditions for Process Measurement and Control Systems: Airborne Contaminants*, ISA-S71.04-1985 (not Foxboro-supplied)
- *EcoStruxure™ Foxboro™ DCS Equipment Room Intelligent Enclosure* (PSS 41H-2I30)
- *EcoStruxure™ Foxboro™ DCS FBI200 Fieldbus Isolator/Filter* (PSS 41H-2FBI200)
- *EcoStruxure™ Foxboro™ DCS FBM232 Field Device System Integrator Module, 10/100 Mbps Ethernet, Single* (PSS 41H-2S232)
- *EcoStruxure™ Foxboro™ DCS FBM233 Field Device System Integrator Module, 10/100 Mbps Ethernet, Redundant* (PSS 41H-2S233)
- *EcoStruxure™ Foxboro™ DCS FBM247, Current/Voltage Analog/Digital/Pulse I/O Configurable Module* (PSS 41H-2S247)
- *EcoStruxure™ Foxboro™ DCS FBM248, Current/Voltage Analog/Digital/Pulse I/O Configurable Module (Redundant)* (PSS 41H-2S248)
- *EcoStruxure™ Foxboro™ DCS Field Control Processor 280 (FCP280)* (PSS 41H-1FCP280)
- *EcoStruxure™ Foxboro™ DCS Fieldbus Communications Module, FCM2F2/FCM2F4/FCM2F10* (PSS 41H-2FCM)
- *EcoStruxure™ Foxboro™ DCS I-Series Intelligent Enclosures Planning and Installation Guide* (B0700GX)
- *EcoStruxure™ Foxboro™ DCS Standard 200 Series Baseplates* (PSS 41H-2SBASPLT)
- *EcoStruxure™ Foxboro™ DCS Standard and Compact 200 Series I/O - Agency Certifications* (PSS 41H-2CERTS)

Proposition 65

WARNING: This product can expose you to chemicals including lead and lead compounds, which are known to the State of California to cause cancer and birth defects or other reproductive harm. For more information go to www.P65Warnings.ca.gov.

Schneider Electric Systems USA, Inc.
70 Mechanic Street
Foxboro, Massachusetts 02035–2040
United States of America

Global Customer Support: https://pasupport.se.com

As standards, specifications, and design change from time to time, please ask for confirmation of the information given in this publication.

© 2019–2025 Schneider Electric. All rights reserved.

PSS 41H-2I20, Rev B