Foxboro™ DCS

G11 Termination Enclosure

PSS 41H-2G11

Product Specification

January 2020



https://www.se.com

Legal Information

The Schneider Electric brand and any trademarks of Schneider Electric SE and its subsidiaries referred to in this guide are the property of Schneider Electric SE or its subsidiaries. All other brands may be trademarks of their respective owners.

This guide and its content are protected under applicable copyright laws and furnished for informational use only. No part of this guide may be reproduced or transmitted in any form or by any means (electronic, mechanical, photocopying, recording, or otherwise), for any purpose, without the prior written permission of Schneider Electric.

Schneider Electric does not grant any right or license for commercial use of the guide or its content, except for a non-exclusive and personal license to consult it on an "as is" basis. Schneider Electric products and equipment should be installed, operated, serviced, and maintained only by qualified personnel.

As standards, specifications, and designs change from time to time, information contained in this guide may be subject to change without notice.

To the extent permitted by applicable law, no responsibility or liability is assumed by Schneider Electric and its subsidiaries for any errors or omissions in the informational content of this material or consequences arising out of or resulting from the use of the information contained herein.

Overview

The EcoStruxure™ Foxboro™ DCS G11 enclosure is specifically designed for housing termination assemblies (TAs) and additional customer-supplied terminal blocks for marshalling of the Foxboro DCS 200 Series Compact or Standard Fieldbus Modules (FBMs). It may accommodate the termination of I/O modules housed in a G10 or G13 system enclosure or G12 or G14 system and termination enclosure.

The G11 enclosure is available as a vented or sealed unit. Both types of enclosures can be configured with:

- Up to 8 vertical DIN rails for mounting of TAs and terminal blocks for marshalling
- Single or redundant power supplies for field power

The G11 vented enclosure is a free-standing, floor mounted unit with an IP 43/55 rating for location in mild (ordinary) environmental areas.

The G11 sealed enclosure is a free-standing, floor mounted unit with options for either an IP 55 or IP 66 rating for location in harsh environments. Sealed enclosures with an IP 66 rating provide a higher level of protection from airborne contamination.

Multiple IP 43/55 rated G-series enclosures, including this enclosure and the G10 or G13 system enclosure, can be installed connected to one another to maximize the use of floor space and ease of cabling. The enclosures can be bayed together using third-party kits.

To preserve the IP 55/66 protection classification for sealed enclosures, they cannot be adjoined.

The G11 enclosure can be set up in these basic configurations:

- Termination only – all DIN rails are allocated for the mounting of TAs only, where the customer terminates field signals directly to the TAs
- Marshalling – all DIN rails are set up in pairs of TAs and terminal blocks to provide additional functionality (such as fusing, disconnects, and lock-out validation) or where customers wish to terminate field cable bundles to dedicated terminal blocks and marshall signals to the appropriate TAs
- A mix of the previous two options, such as the first in the front and the second in the rear

This enclosure and its configurations have been tested and qualified by Foxboro for use with Standard 200 Series subsystem TAs.

Features

- Up to eight 1,900 mm (74.8 in) vertical DIN rails for mounting of TAs and terminal blocks for marshalling, to provide a total of 15.2 m (49.8 ft) of linear rail space
- Vented or sealed enclosure selection for use in ordinary (IP 43/55) or harsh (IP 55/66) rated environments
- Available PVC or non-PVC wireways for field I/O cabling, with optional signal segregation barrier plate for isolation
- Generous 76 mm x 102 mm (3 in x 4 in) wire ducts with adequate capacity for most wire management
- Compact design to minimize use of floor space with both front and rear access that allow maximum packaging density of control equipment
- Options for single or redundant power supplies for field power and power distribution terminal block assemblies for customer-supplied power
- Bottom or top cable entry for TA cables and power wiring, but can be customer configured for both top and bottom cable entry
- Conveniently placed eyebolts for transporting and lifting the enclosures
- A 100 mm (4 in) plinth increases total enclosure height to 2,160 mm (85.0 in)
- Handles with push-button/keylocks
- Standard safety grounding studs

Contamination Protection

The metal enclosures provide the outer layer of protection for the control electronics. Other layers are provided by the module covers and built into the modules. This approach to protection means that a minimum of contaminants in the plant environment reaches the control components, thus greatly extending the life of the equipment.

For sealed Ingress Protection (IP) 55/66 certified enclosures, heat is transferred through conduction from the interior surfaces of the enclosure and then dissipated by the enclosure's exterior surfaces into the plant environment. Air is not exchanged between the enclosure's interior and the outside environment; therefore, contaminants are minimized inside the enclosure. Sealed IP 55/66 versions can be used outdoors in sheltered locations.

The enclosures support convenient top or bottom cable entry for field cabling and power wiring. Vented enclosures with roof-mounted fans are not recommended with top cable entry.

Thermal Protection

Ventilation fans and vented doors increase circulation for convective heat removal and can be used:

- At installations with only moderate levels of airborne contaminants, exposed enclosure interiors can allow plant air to circulate and remove the heat generated within the modules
- In areas (such as offices) where there are no requirements to filter the air

Vented enclosures contain a dual fan assembly located at the top of the enclosure or single fan assemblies located on the enclosure front and rear doors. Enclosures with vented doors can be located in main equipment areas or in an environment with office air quality.

Dual Thermostat

An optional dual (high/low) thermostat is available to monitor enclosure temperature extremes, with the exception of Zone 2 (IEC)/Class I, Division 2 applications.

Vented Enclosure Design Options

The G11 vented enclosure is available with either roof-mounted or door-mounted fans.

Roof-mounted fans provide the best performance for cooling and a lower noise level than door-mounted fans. However, roof-mounted fans can restrict top-entry cable access to the enclosure and reduce the overall ingress protection rating. For customers who plan to modify the swing direction of their enclosure doors, fans mounted on the roof allow the process to proceed more smoothly.

Door-mounted fans are desirable for top-entry cable access configurations, and they provide the highest level of ingress protection for vented enclosures.

Termination Assembly Mounting

The G11 termination enclosure has up to eight vertical DIN rails for mounting TAs and customer-supplied terminal blocks for marshalling. Four of the DIN rails are accessible from the rear of the enclosure and four from the front. For each set of four DIN rails, two are mounted in the center of the enclosure, and two are mounted on the sides.

Be aware that it may not be possible to add all the marshalling to this enclosure, depending on the size of the TAs required in this enclosure.

Optional bus bars for field wiring shields and DIN rail isolation are available. These are used when customer field shields are terminated on dedicated terminal blocks that ground to the DIN rail. Isolation allows rails to be isolated from the enclosure ground.

An optionally redundant 100-250 V AC/125 V AC, 50-60 Hz field power supply is available for field power, and is mounted on side rails of the enclosure (see *Figure 2, page 8* and *Figure 3, page 9*). When using field power supplies, one of the eight DIN rails must be allocated for these supplies only. Both vented and sealed enclosures have a limited thermal load (see *Environmental Specifications, page 12*).

DIN rail-mounted TAs support different levels of thermal loading. For more information on the various types of TAs in a Foxboro DCS, see *Compact 200 Series I/O Subsystem Overview* (PSS 41H-2COV), *Standard 200 Series Subsystem Overview* (PSS 31H-2S200), and *Related Product Documents, page 16*.

Termination Assembly/Input Power Cabling and Wireways

The enclosures can be ordered for bottom or top cable entry or modified by the customer for simultaneous top and bottom cable entry.

For the top cable entry version, the TA cables and/or customer power feeds enter through customer-configured cable glands. Any customizations made must follow the manufacturer’s guidelines to preserve the enclosure's ingress protection rating. Vented enclosures with roof fans are not recommended for top cable entry.

For the vented bottom entry version, the TA cables and power cables enter through removable gland plates, located at the bottom (inside) of the enclosure, which can be removed, drilled, or punched for cable routing.

For the sealed bottom entry version, the TA cables and power cables enter through a solid bottom panel located at the bottom (inside) of the enclosure, which can be drilled or punched for cable routing. Users must provide their own cable glands (for top or bottom cable entry), in keeping with maintenance of the enclosure's ingress protection.

An optional signal segregation barrier plate provides isolation between the two interior adjacent wireways. Cabling is restricted to preconfigured wireways, available in PVC or non-PVC versions. It is not recommended to use any wireways in the G11 termination enclosure when it is fully loaded or used with the G13 or G14 enclosures.

Cable straps are provided in the enclosure to dress and support the TA cables.

Power and Grounding

The G11 enclosure supports an optional single or redundant power system for field power to help protect against detected power failures.

Power wiring to the enclosure is routed through the bottom or top of the enclosure. Optional customer-supplied dual power input feeds terminate at dedicated single or redundant power distribution terminal block assembly.

All enclosure structural elements are integrally earthed by the enclosure design to meet the appropriate industry regulations and standards.

Field power may be provided by a single or redundant standard 200 Series power supply that uses 100-250 V AC, 50-60 Hz, 125 V DC. The power supply uses a diode redundancy module and is agency certified for use in Zone 2/Class I, Division 2 applications.

Grounding

Two M8 studs (one for each enclosure side) provide a central ground point and dedicated grounding points when baying enclosures together.

Power Distribution

Each power distribution terminal block assembly (primary, secondary, or utility for powering fans and lights, see *Figure 2, page 8*) has dedicated ring lug assembly terminal blocks for customer main power. Each also has fusable, knife disconnect terminal blocks for interrupting the main power, as well as independent knife disconnect terminal blocks for each device for ease of service.

Additional blocks are provided for the customer to install utility outlets.

The enclosure is available without these power distribution terminal blocks when the customer has requirements for power distribution specific to regional electrical codes.

Figure 1 - G11 Enclosure Termination and Marshalling Layouts and DIN Rail Identification

G11 Marshalling Layout and DIN Rail Identification

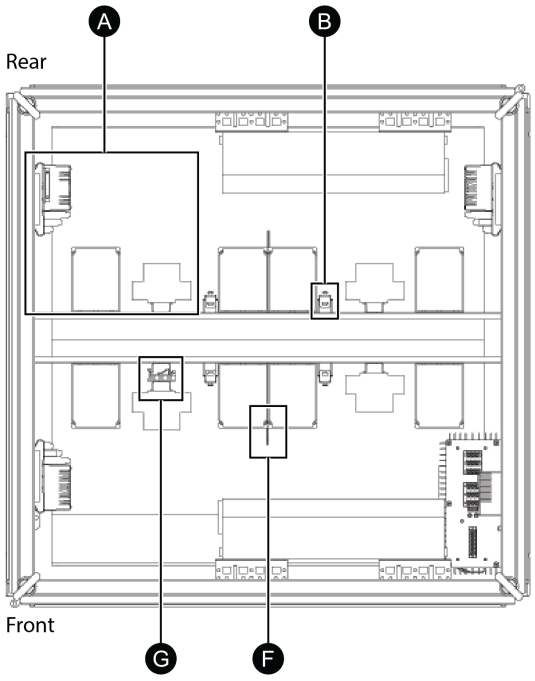

G11 Termination Layout and DIN Rail Identification

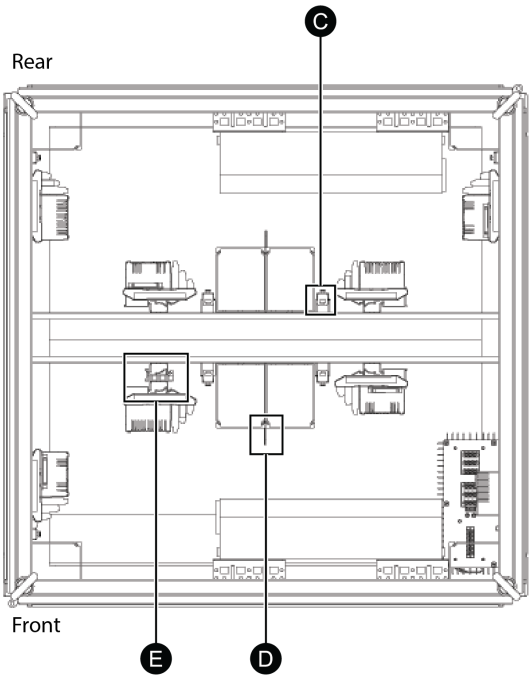

Legend			
A	Termination Assembly and Associated Terminal Blocks (per configuration)	**E**	DIN Rail Isolation (per configuration)
B	Bus Bar for Field Wiring Shields (per configuration)	**F**	Segregation Barrier for Varying Field Signals (per configuration)
C	Bus Bar for Field Wiring Shields (per configuration)	**G**	DIN Rail Isolation (per configuration)
D	Segregation Barrier for Varying Field Signals (per configuration)		

NOTE: For both setups, Rail A is reserved for terminal blocks and power supplies associated with single or redundant 24 V DC field power per configuration.

Figure 2 - Termination Enclosure with Marshalling Option, Front View, Bottom Entry

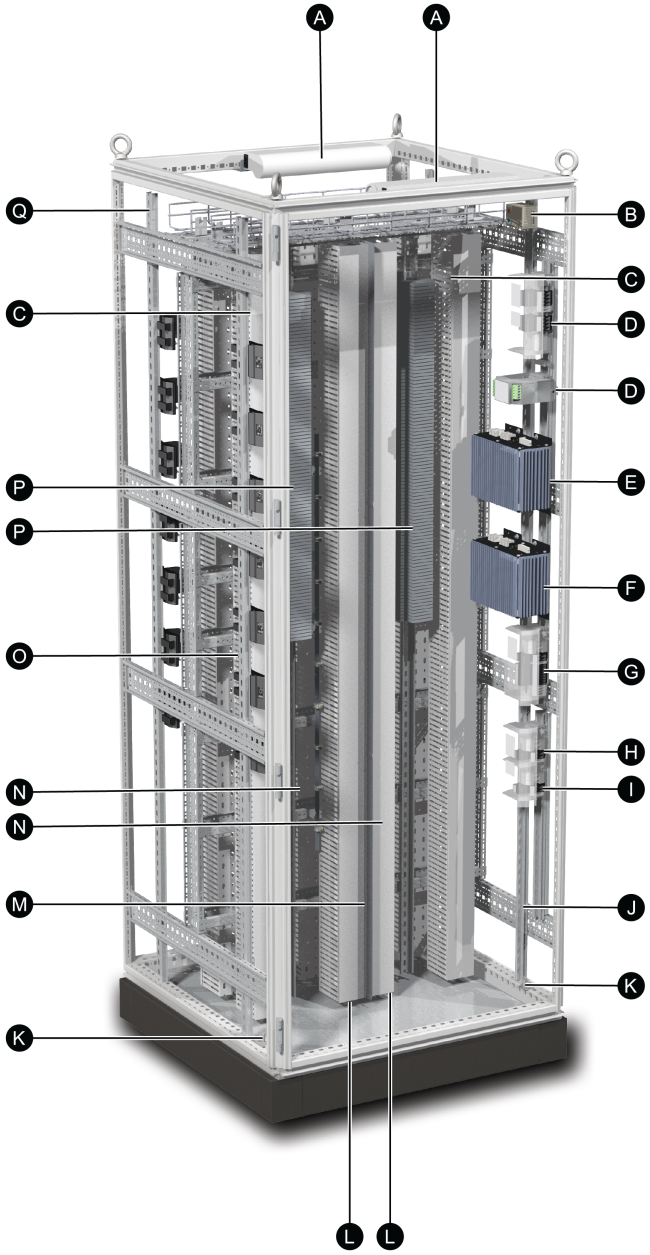

Legend					
A	LED Lights	**G**	ac Utility Power Terminal Blocks	**M**	Signal Segregation Barrier Plates
B	High/Low Thermostat	**H**	Power Distribution and Disconnects, Primary	**N**	Bus Bar for Field Wiring Shield
C	76 mm x 102 mm (3 in x 4 in) Marshalling Wire Management	**I**	Power Distribution and Disconnects, Secondary	**O**	Termination Assembly DIN Rail
D	Redundant Field Power Distribution Terminal Blocks with Diode Assembly	**J**	Termination Assembly DIN Rail (Limited Availability Based on Power Options)	**P**	Terminal Block (Marshalling) DIN Rails
E	Primary Redundant Field Power Supply	**K**	Safety Ground Stud	**Q**	51 mm x 102 mm (2 in x 4 in) Cable Tray Wire Management for Marshalling Between DIN Rails (Mounted at Bottom in Top-Entry Option)
F	Secondary Redundant Field Power Supply	**L**	76 mm x 102 mm (3 in x 4 in) Field Wire Management Ducts		

Figure 3 - Termination Enclosure with Marshalling Option, Rear View, Bottom Entry

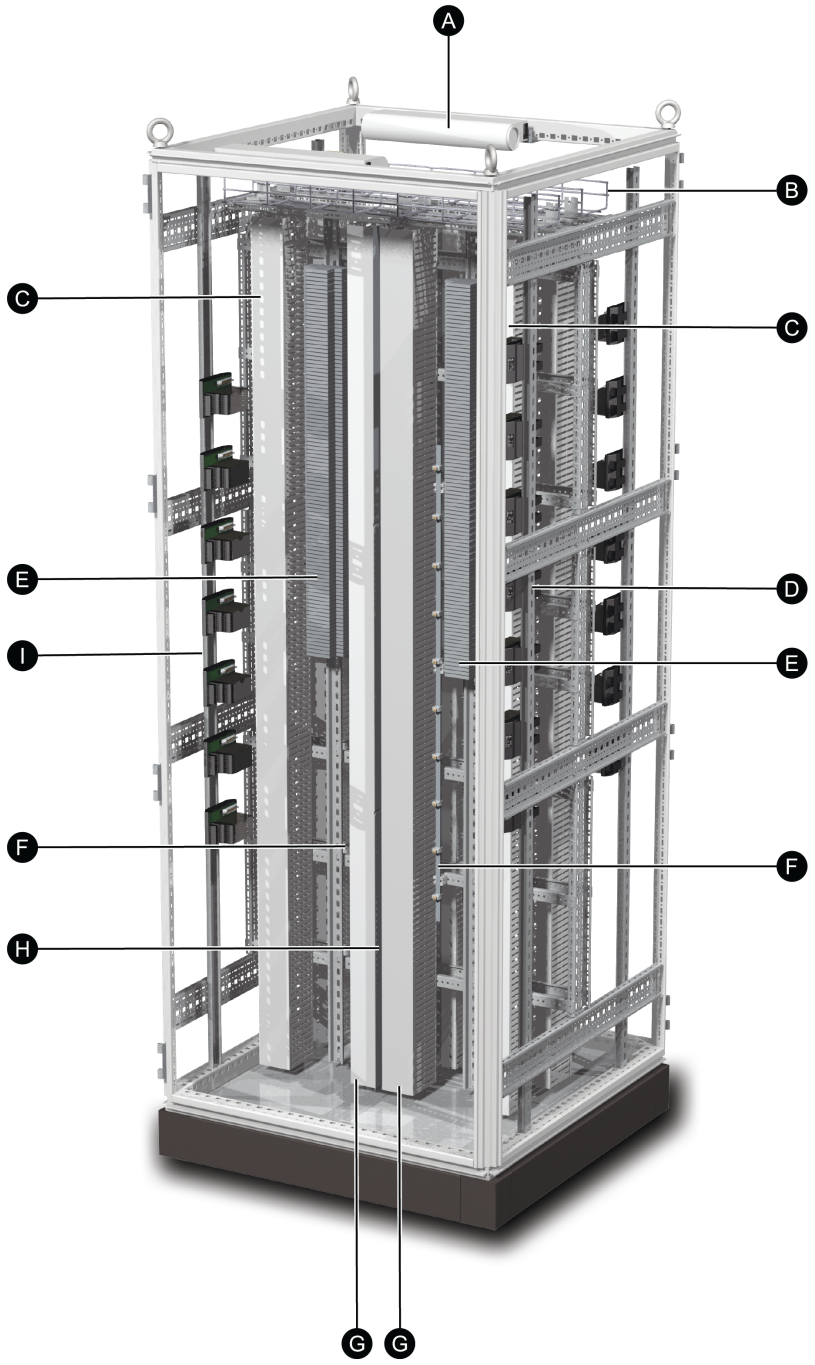

Legend			
A	LED Light (Front and Rear of Enclosure)	**F**	Bus Bar for Field Wiring Shield
B	51 mm x 102 mm (2 in x 4 in) Cable Tray Wire Management for Marshalling Between DIN Rails (Mounted at Bottom in Top-Entry Option)	**G**	76 mm x 102 mm (3 in x 4 in) Field Wire Management Ducts
C	76 mm x 102 mm (3 in x 4 in) Marshalling Wire Management	**H**	Signal Segregation Barrier Plates
D	Termination Assembly DIN Rail	**I**	Termination Assembly DIN Rail
E	Terminal Block Marshalling DIN Rails		

Enclosure Options

Feature	Availability
Base Enclosure	Vented IP 43/55 rated enclosure with dual front and rear door-mounted fans (120 V AC or 240 V AC) or roof-mounted fans (120 V AC or 240 V AC – dual fans), or sealed IP 55 rated enclosure Sealed IP 66 rated enclosure
Enclosure Access	Front and rear access
Front Door	Solid front door with inlet vents
Cable Entry	Bottom cable entry or top cable entry (top entry not recommended for roof-mounted fans)
Sidewalls	Options configurable based on baying requirements
Door Handle	Comfort handle with push-button/keylock
Door Mounting	Universal mounting for left and right-hand door swing (left-hand is default)
Field Wiring Options	• PVC or non-PVC wireways for field I/O signal cabling • Optional signal segregation barrier plate for field signal isolation — when used with different signals, the barrier option is recommended • Optional bus bars for field wiring shields and/or DIN rail isolation
Equipment Supported	• Up to eight DIN rails per enclosure available for mounting termination assemblies and customer-supplied terminal blocks for marshalling • Optional 120 V AC or 240 V AC input field power
Enclosure Lighting[a]	Universal single and/or dual enclosure lights with motion activation
Thermostat[a]	Dual temperature thermostat
Fans[a]	Door-mounted or roof-mounted fans
Grounding[a]	Two protective ground studs
Field Power Options[a]	• Single or redundant field power supply, 100-250 V AC, 50-60 Hz, 125 V DC input • Single or redundant power distribution terminal block assemblies for customer configured power entry • No option is available for 24 V DC field power — however, it can be directly sourced by the customer following local electrical guidelines • Customer-configured field power entry is supported. Terminal blocks supplied as per configuration
Utility Power	120 V AC or 240 V AC utility power terminal block

[a] If you are installing a G-series enclosure as part of a Zone 2 (IEC) / Class I, Division 2 application, see *Standard and Compact 200 Series I/O - Agency Certifications* (PSS 41H-2CERTS) to determine 200 Series subsystem equipment location suitability. Also, be aware that optional enclosure electrical accessories, such as LED lights, roof or door-mounted fans, and thermostats, may not be used in hazardous (Zone 2 (IEC)/Class I, Division 2) environments.

Functional Specifications

Enclosure	The enclosures are free-standing, floor mounted, steel industrial enclosures containing: • Vertically mounted DIN rail mounted termination assemblies and terminal blocks • 100-250 V AC, 50-60 Hz, 125 V DC field power supplies (single or redundant power)
Input Power (Optionally Redundant)	See *Standard 200 Series Power Supply -FPS400-24* (PSS 41H-2FPS400) and *Compact Power Supply - FPS480-24* (PSS 41H-2C480)

Environmental Specifications

	Operating	Storage
Temperature	• Vented (Thermal Loading)[a]: -20 to +60°C (-4 to +140°F) Up to 750 Watts (Average) -20 to +55°C (-4 to +131°F) 750 to 1,000 Watts (Maximum) • Sealed (Thermal Loading)[a]: -20 to +50°C (-4 to +122°F) Up to 400 Watts (Average) -20 to +45°C (-4 to +113°F) 400 to 500 Watts (Maximum)	-40 to 70°C (-40 to 158°F)
Relative Humidity	5 to 95% (noncondensing)	
Ingress Protection Ratings	• Vented: ◦ Door-Mounted Fans: IP 55 to EN 60 529 / NEMA 12 ◦ Roof-Mounted Fans: IP 43 to EN 60 529/10.9191 / NEMA 12 • Sealed: IP 55 to EN 60 529 / NEMA 12 IP 66 to EN 60 529 / NEMA 4	
Acoustic Noise Level[b]	• Roof-Mounted Fans: 61 dB (A) at 1 m/58 dB (A) at 3 m • Door-Mounted Fans: 64 dB (A) at 1 m/62 dB (A) at 3 m • Sealed Enclosure (No Fans): Ambient/Ambient	
Dual Thermostat	• High Alarm Setting: NC contact, Range: 0 to 60°C (32 to 140°F) • Low Alarm Setting: NO contact, Range: 0 to 60°C (32 to 140°F)	
Agency Certification	Empty enclosure is UL and UL-C approved. Enclosure meets all applicable European Union directives and is CE compliant. Final installed enclosures populated with your equipment should be inspected by your local UL/CSA committee, or other local safety governing organization if required. A complete listing of certifications is available from enclosure vendor. For installed Foxboro DCS equipment, see *Standard and Compact 200 Series I/O - Agency Certifications* (PSS 41H-2CERTS).	
Area Designation	Per customer order, vented for general purpose or sealed for hazardous area (Zone 2 (IEC)/ Class I, Division 2, (North America)	

[a] Some TAs have operating temperatures lower than the rated enclosure specification.

[b] Under normal operating conditions, with both fans running, at enclosure's mid-height at 46 dB (A) ambient noise level.

Physical Specifications

Weight	The weight of the enclosure is dependent upon the particular configuration. Consult a Foxboro representative if precise weight figures are required. • Vented Enclosure with Side Panels: (ALLOWABLE MAX. WEIGHT WHEN LOADED) 800 x 800 mm (31.5 x 31.5 in) - 277 kg (611 lb)
Mounting	Floor **⚠CAUTION** **RISK OF EQUIPMENT DAMAGE OR INJURY** To prevent injury, this enclosure must be bolted down. See *Enclosures and Mounting Structures - Site Planning and Installation User's Guide* (B0700AS). **Failure to follow these instructions can result in injury or equipment damage.**
Construction	Sheet steel with textured, powder-coated finish
Color	• Side Panels, Roof, and Doors: RAL 7035 - light gray - textured • Plinth: RAL 7022 - umbra gray smooth
Panel Thickness	• Doors: 2 mm (14 ga) • Side Panels, Roof: 1.5 mm (16 ga)
Construction	• Material: ◦ Doors: Sheet steel, 2.0 mm (14 ga) ◦ Frame, Roof, Side Panels, Gland Plates: Sheet steel, 1.5 mm (16 ga) ◦ Base/Plinth: Sheet steel and plastic • Finish: ◦ Frame: Dipcoat-primed, RAL 7044 smooth ◦ Doors, Roof, Side Panels: Dipcoat-primed, powder-coated, RAL 7035 (light gray) textured ◦ Base/Plinth: Dipcoat-primed, RAL 7022 (umbra gray) smooth, plastic cover caps RAL 9005 (jet black) ◦ Gland Plates and Internal Hardware: Zinc-plated, passivated

Cable Entry	Vented Enclosure: • Bottom through gland plate(s) • Top through customer cutouts in enclosure top (For enclosure with roof-mounted fans, suggested entry is bottom) Sealed Enclosure: • Bottom through steel panel and customer cutouts in panel • Top through customer cutouts in enclosure top
Grounding	• Roof, Side Walls, Gland Plates: Automatic potential equalization built in • Doors: Dedicated 6 mm^2 (10 ga) ground strap to enclosure frame • Enclosure: Two M8 studs (one for each enclosure side)
Power Input Terminals	• Type: Ring Lug • Wire Size: Up to 6 mm^2 (10 AWG) • Ring Lug Size: M4 Maximum (DIN 46 234/46 237), 9.6 mm maximum O.D.
Termination Assembly Cabling	Universal mounting straps are supplied for attaching, routing, and strain relieving of TA cables. Each strap supports up to a 75 mm (3 in) diameter cable bundle.

Dimensions - Nominal

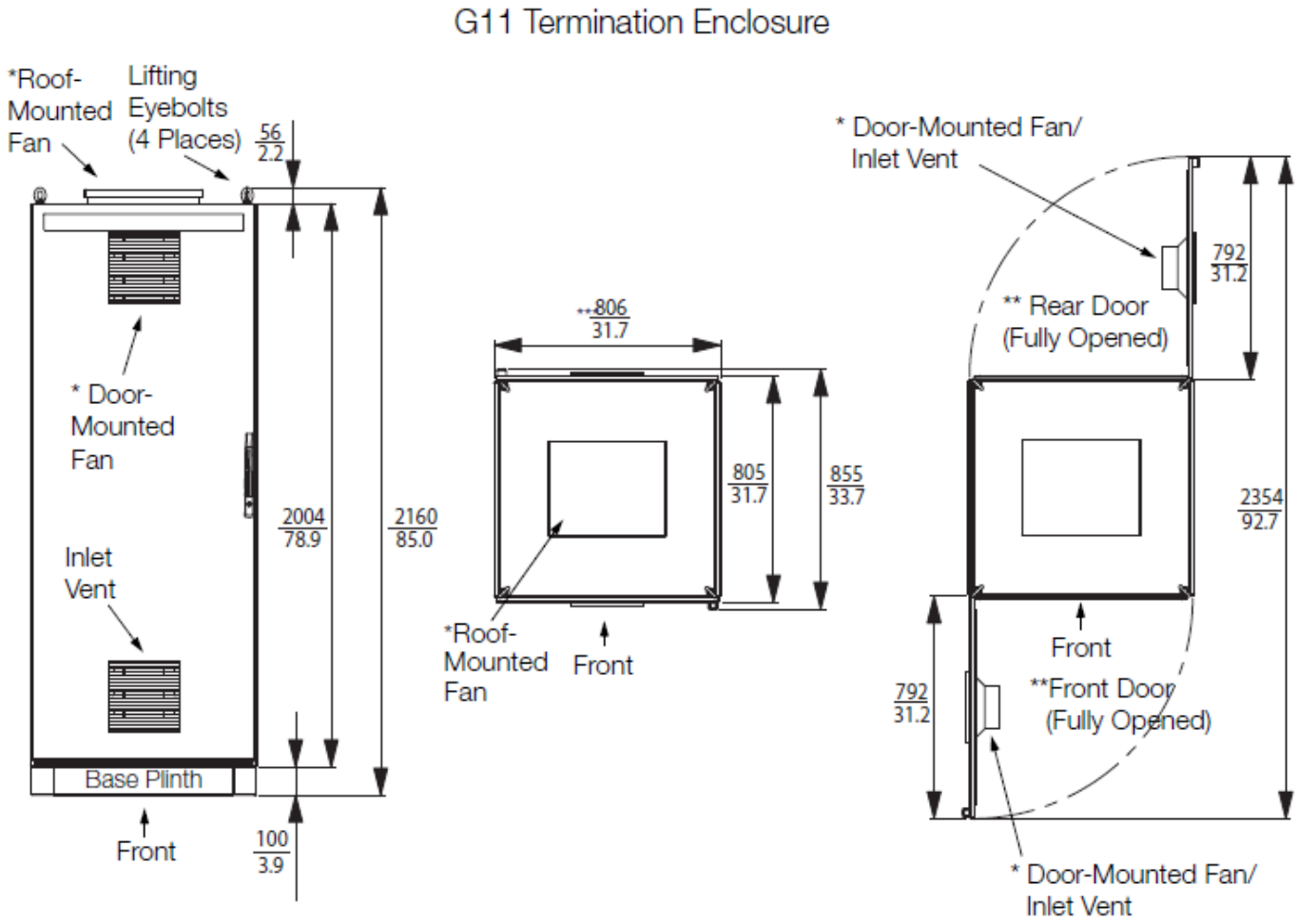

* Vented enclosures only — either roof- or door-mounted configurations can be ordered.

** Doors are factory-configured for left-hand swing, but can be reconfigured at site for right-hand swing.

*** With side panels, without side panels 800/31.5.

Related Product Documents

Document Number	Description
PSS 41H-2COV	*Compact 200 Series I/O Subsystem Overview*
PSS 31H-2S200	*Standard 200 Series Subsystem Overview*
PSS 41H-2CERTS	*Standard and Compact 200 Series I/O - Agency Certifications*
PSS 41H-2FPS400	*Standard 200 Series Power Supply -FPS400-24*
PSS 41H-2C480	*B4 Compact Power Supply - FPS480-24*
PSS 41H-2GOV	*G-Series Enclosures Overview*
B0700AS	*Enclosures and Mounting Structures - Site Planning and Installation User's Guide*
ISA-S71.04-1985 (not Foxboro-supplied)	*Environmental Conditions for Process Measurement and Control Systems: Airborne Contaminants*

WARNING: This product can expose you to chemicals including lead and lead compounds, which are known to the State of California to cause cancer and birth defects or other reproductive harm. For more information, go to www.p65warnings.ca.gov/.

Schneider Electric Systems USA, Inc.
38 Neponset Avenue
Foxboro, Massachusetts 02035–2037
United States of America

Global Customer Support: https://pasupport.schneider-electric.com

As standards, specifications, and design change from time to time, please ask for confirmation of the information given in this publication.

© 2020 Schneider Electric. All rights reserved.

PSS 41H-2G11, Rev A