Foxboro™ DCS

Edge I/O

PSS 41H-2EDGE-IO

Product Specification

April 2026



https://www.se.com

Legal Information

The information provided in this document contains general descriptions, technical characteristics and/or recommendations related to products/solutions.

This document is not intended as a substitute for a detailed study or operational and site-specific development or schematic plan. It is not to be used for determining suitability or reliability of the products/solutions for specific user applications. It is the duty of any such user to perform or have any professional expert of its choice (integrator, specifier or the like) perform the appropriate and comprehensive risk analysis, evaluation and testing of the products/solutions with respect to the relevant specific application or use thereof.

The Schneider Electric brand and any trademarks of Schneider Electric SE and its subsidiaries referred to in this document are the property of Schneider Electric SE or its subsidiaries. All other brands may be trademarks of their respective owner.

This document and its content are protected under applicable copyright laws and provided for informative use only. No part of this document may be reproduced or transmitted in any form or by any means (electronic, mechanical, photocopying, recording, or otherwise), for any purpose, without the prior written permission of Schneider Electric.

Schneider Electric does not grant any right or license for commercial use of the document or its content, except for a non-exclusive and personal license to consult it on an "as is" basis.

Schneider Electric reserves the right to make changes or updates with respect to or in the content of this document or the format thereof, at any time without notice.

To the extent permitted by applicable law, no responsibility or liability is assumed by Schneider Electric and its subsidiaries for any errors or omissions in the informational content of this document, as well as any non-intended use or misuse of the content thereof.

Overview

The EcoStruxure™ Foxboro™ DCS Edge I/O solution is a cost-optimized, energy efficient, high availability, software-defined universal I/O module with advanced diagnostics to help ensure continuous plant operation. This solution uses software configurable I/O channels that can be configured to support different I/O types with advanced system-to-field diagnostics for predictive maintenance and operational resilience. With this software defined I/O module, system design, maintenance, and operation is simplified to reduce operational costs.

The Edge I/O solution includes:

- Software-configurable Universal I/O Modules (UIOM)
- System Communication Modules (SCMs) for distributing and connecting input/output (I/O) to the Foxboro DCS Control Processor 280 (FCP280)
- Baseplates, cables, and termination assemblies (TAs)

The solution is optimized for equipment room (local I/O) and field-mounted (remote I/O) intelligent enclosures.

Figure 1 - Edge I/O Architecture

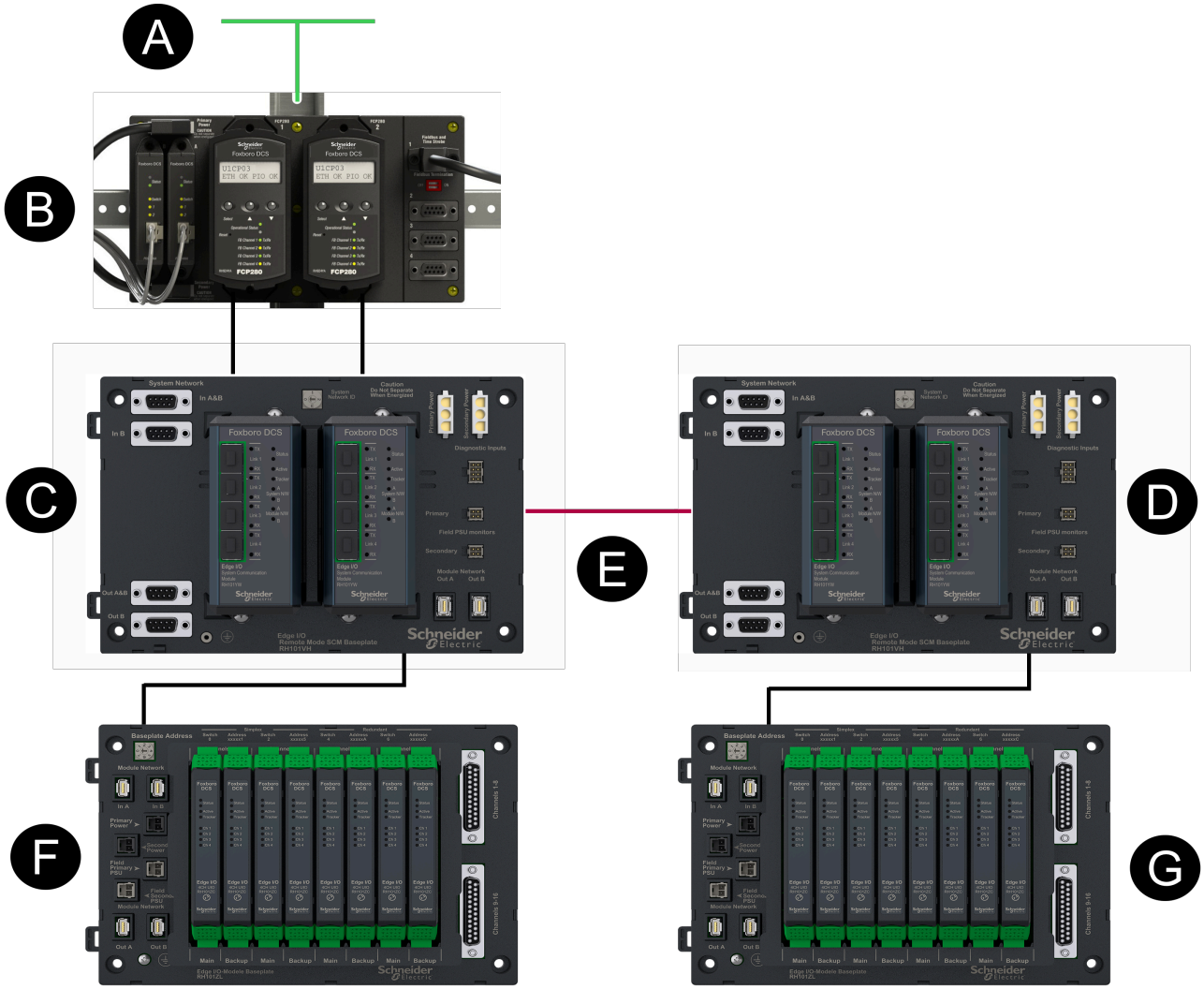

A	Control Network
B	FCP280 Controller
C	System Communication Module (SCM)
D	System Communication Module (SCM)
E	Redundant Fiber-optic Cable
F	Edge I/O Module Baseplate (Local I/O)
G	Edge I/O Module Baseplate (Remote I/O)

The FCP280 has four I/O channels and can concurrently support Edge I/O and 200 Series Standard and Compact form factor FBMs on different I/O channels. For more information, see *EcoStruxure™ Foxboro™ DCS Standard and Compact 200 Series Subsystem User Guide* (B0400FA).

Features

- Edge I/O Module, page 5
- System Communication Module (SCM), page 7
- Intelligent Enclosures, page 9

Edge I/O Module

The Edge I/O module is a four-channel software-configurable universal I/O module that can operate in simplex and redundant modes. It has low power consumption and optimized thermal performance and is certified for hazardous and harsh area locations.

Figure 2 - Four-Channel Universal I/O Module



The Edge I/O module supports these signal types:

- Analog Input : 0-20 mA, 4-20 mA with or without HART, 0-10 V
- Analog Output: 0-20 mA, 4-20 mA with or without HART
- Digital Input: 0-24 V, Dry/Wet Contact, Pulse, Counter, and Frequency
- Digital Input: NAMUR Proximity Switch (EN60947-5-6:2000)
- Digital Output: Source High-Current (500 mA)
- Digital Output: Source Low-Current (25 mA)
- Compliant to NAMUR NE43
- Short-circuit current protection per channel

Edge I/O modules are mounted on a baseplate with eight positions to provide 16 I/O channels per baseplate.

For redundant operation, all baseplate slots are populated. For simplex operation, adjacent (backup) baseplate slots are empty.

Figure 3 - Edge I/O Module Baseplate with Modules



The baseplate has separate redundant connections for system and field power, as well as redundant communication cables for module network connection from the SCM baseplate or another Edge I/O module baseplate.

The baseplate has two orientations, left and right, to optimize routing for power, communication, and field I/O cables. The left-oriented baseplate (RH101ZL) has the power connections positioned on the left of the baseplate. The right-oriented baseplate (RH101ZU) has the power connections positioned on the right of the baseplate.

The baseplate supports:

- Two system cable interfaces, which allows for flexible TA options and enclosure designs.
- DIN rail or panel mounting.
- Left and right orientation options.

For more information, see Functional Specifications - Edge I/O Module, page 16.

System Communication Module (SCM)

The SCM operates in pairs to provide redundant system network connections between I/O modules and the FCP280.

The SCM supports local I/O connections to the FCP280 using redundant copper cabling, and remote I/O connections using redundant fiber optic cabling.

Each SCM pair supports 64 simplex or redundant I/O when using Edge I/O modules, with four SCM pairs supported by an FCP280 I/O bus channel to provide a total of 256 Edge I/O per FCP280 I/O bus channel.

The FCP280 supports a total of 1024 simplex or redundant Edge I/O using all four FCP280 I/O bus channels.

Figure 4 - System Communication Module



The SCM supports up to four redundant fiber optic connections in star, daisy chain, or mixed star/daisy chain topologies.

The SCM supports 200-series Fieldbus Modules (FBMs) via FCM2FX mode and provides the functionality of the Field Communication Modules (FCM2F2, FCM2F4, and FCM2F10) to extend the FCP280 I/O bus to remote locations over fiber optic cable. Compared to FCMs, the SCM provides additional space optimization. The SCM is not a form fit replacement for an FCM2FX, and SCMs and FCM2FXs cannot be mixed on the same I/O bus extension.

Star Mode is supported by Edge I/O and 200 Series FBMs. This mode extends one FCP280 I/O bus channel to up to four remote locations. An SCM in Star Mode can be connected to each of the FCP280's four I/O bus channels to support up to 16 remote locations.

You can use the SCM in Star Mode to reduce the amount of fiber cabling used from Field Mounted Intelligent Enclosures (Smart Junction Boxes) to a control/equipment room where controllers are located. Because this mode uses less cabling, it also helps reduce costs.

You can mount a Star Mode SCM in the field to create a field star point from which redundant fiber cabling is extended back to a Star Mode SCM connected to an FCP280 in a control/equipment room. Shorter fiber cabling connects the Field Star Mode SCM to Smart Junction Boxes.

Figure 5 - Star Mode SCM Baseplate

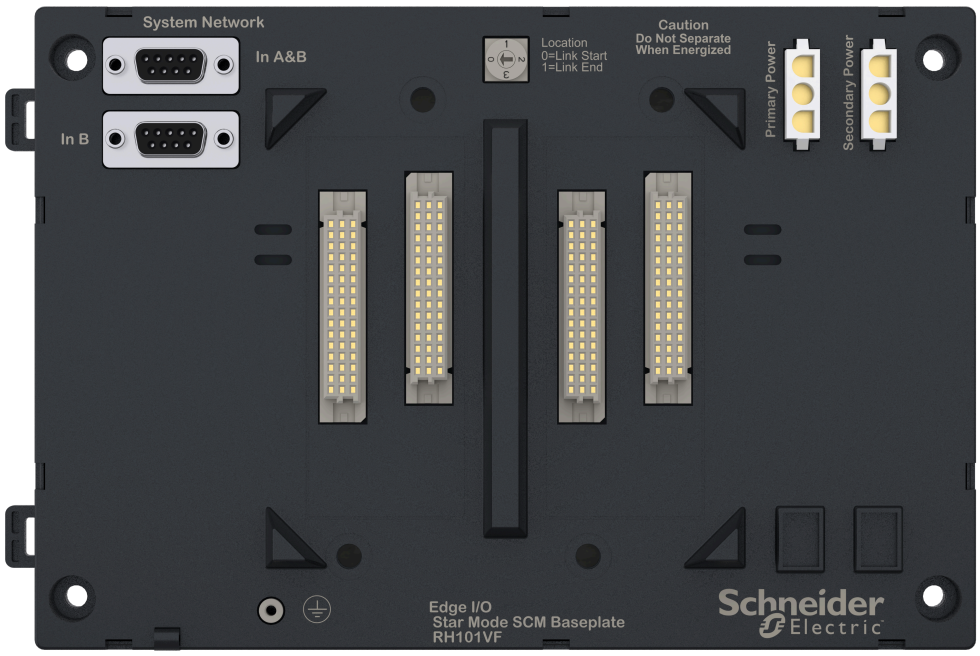

Quad Mode is supported by Edge I/O and 200 Series FBMs. This mode extends each FCP280 I/O bus channel to a remote location. An SCM in Quad Mode can be connected to each of the FCP280's four I/O bus channels to support four remote locations.

An SCM in Quad Mode can replace four FCM2F2s, or four FCM2F4s, or four FCM2F10s.

Figure 6 - Quad Mode SCM Baseplate

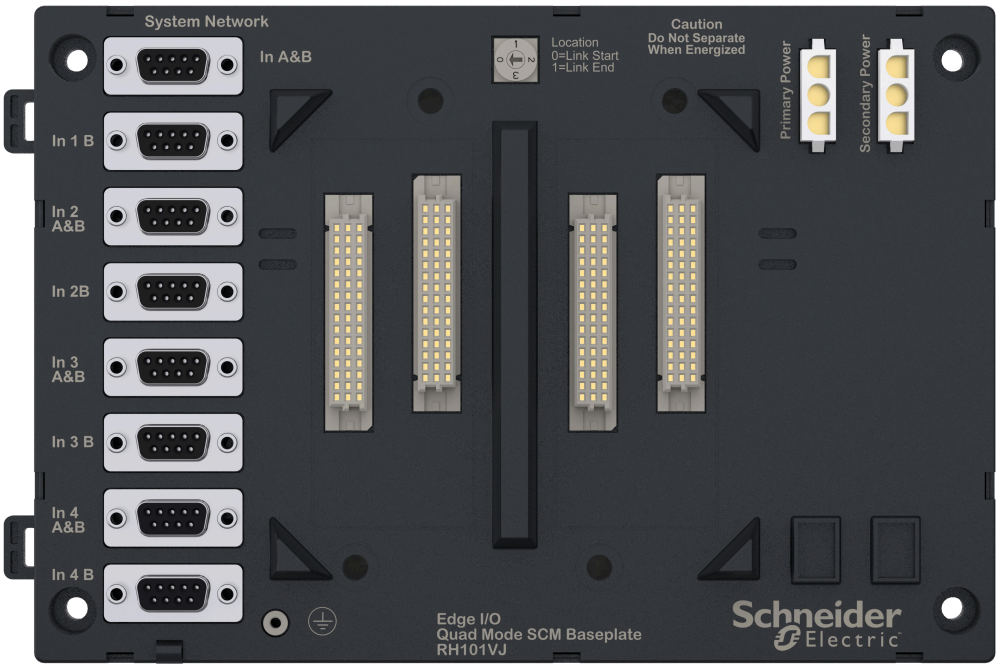

Remote Mode is supported by Edge I/O only. This mode baseplate connects to one FCP280 I/O bus channel with redundant copper cabling using the system network connectors on the SCM baseplate. Alternatively, the Remote Mode SCM can also use

fiber small form-factor pluggable (SFP) modules to connect to Star Mode or Quad Mode SCMs that are connected to an FCP280 with redundant fiber optic cable.

The Remote Mode SCM collects sequence of events (SOE) and transient data recording (TDR) data received from the Edge I/O modules and passes the data to the FCP280. If there is insufficient bandwidth or loss of communication with the FCP280, the SCM can store (buffer) up to 2000 TDR values (20 seconds) or 4000 SOE events for each Edge I/O channel.

NOTE: SOE functionality requires Control Core Services (CCS) v9.9 or later.

Each Remote Mode SCM baseplate connects to an Edge I/O module baseplate using redundant module network cables. A Remote Mode SCM supports up to four Edge I/O module baseplates, each with 16 simplex or redundant I/O to provide a total of 64 I/O per Remote Mode SCM.

The Remote Mode SCM baseplate can daisy chain to another Remote Mode baseplate using the Out System Network Connectors. Four Remote Mode baseplates, each with 64 simplex or redundant I/O, can connect to provide 256 I/O per FCP280 I/O bus channel.

A Remote Mode SCM baseplate has built-in temperature and relative humidity sensors that provide continuous temperature and relative humidity measurements to the system.

The Remote Mode SCM baseplate has four volt-free contact inputs for additional enclosure diagnostic signals (for example, door open). Field PSU can be connected to baseplate contacts for voltage monitoring.

Figure 7 - Remote Mode SCM Baseplate

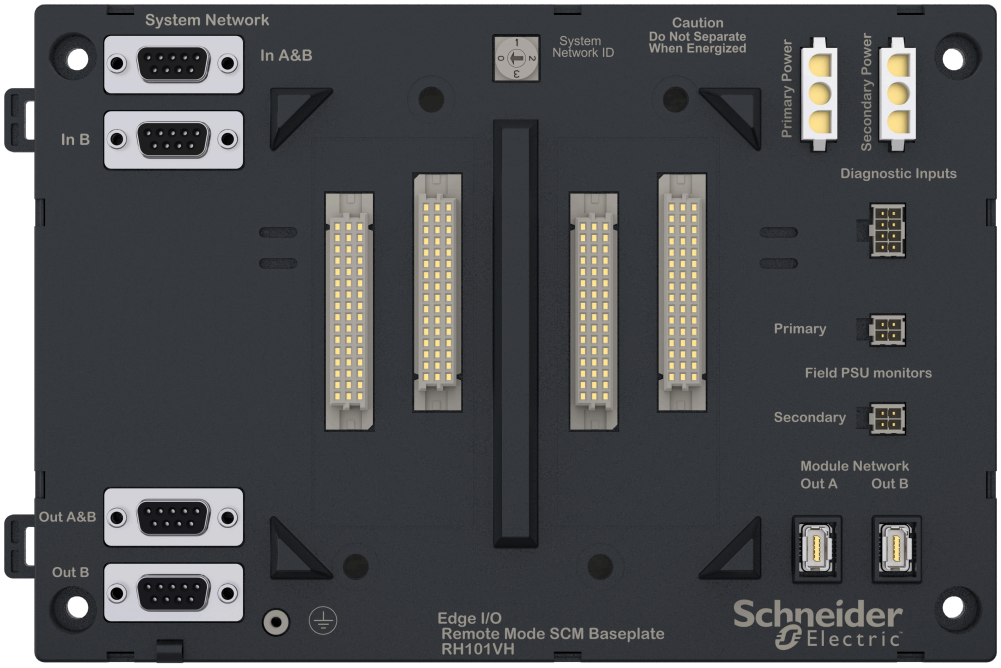

For more information, see Functional Specifications - System Communication Module, page 21.

Intelligent Enclosures

The Foxboro DCS Intelligent Enclosure provides integrated solutions using the SCM to connect software configurable universal Edge I/O modules to the FCP280. This

provides space and thermally efficient designs with built-in enclosure diagnostics for operational visibility and predictive maintenance applications.

- The Smart Junction Box is designed to be mounted in the field and connects through redundant multi-mode or single mode fiber to the FCP280. For more information, see Field Mounted Intelligent Enclosure (Smart Junction Box), page 10.
- The Equipment Room Intelligent Enclosure is designed to be installed in air conditioned, non-hazardous equipment room environments. The enclosure requires front and rear access, with system components mounted in the front and field wiring optionally in the rear or another enclosure. For more information, see Equipment Room Intelligent Enclosure, page 13.

Detailed 3D enclosure models are included to help enable a detailed understanding and visualization of the enclosure general arrangement. These models detail power distribution wiring, diagnostic wiring, communication, and system cabling to confirm voltage level segregation, routing, access for installation, maintenance, expansion, and so on.

Field Mounted Intelligent Enclosure (Smart Junction Box)

- Protection against harsh environments and hazardous locations:
  - NEMA 4X/IP66 rated
  - Class G3 (harsh) environment
  - Hazardous Area Certification
- 64, 96, or 128 simplex/redundant software configurable Edge I/O
- Redundant SCMs for connection to the FCP280 using fiber optic cabling
- Fiber optic patch panel with LC connectors for terminating and distributing fiber-optic cables for communication to the enclosure
- Document pocket inside front door
- Door stoppers to help prevent the door from swinging or opening too widely
- Door-open sensor to notify when enclosure is open
- Power distribution for connecting customer-supplied 120 VAC or 230 VAC redundant power feeds
- Redundant 24 VDC system PSUs
- Redundant 24 VDC field PSUs
- Drain plug
- Supports the Intelligent Commissioning Wizard, which significantly reduces commissioning effort and shortens the time to plant start-up. For more information, see *EcoStruxure™ Foxboro™ DCS Field Device Expert for HART Devices* (PSS 41S-10FDMHRT).

Figure 8 - Field Mounted Intelligent Enclosure

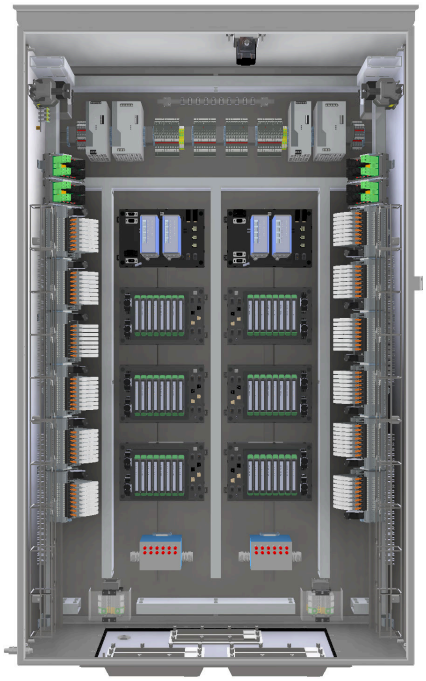

Environmental Protection

The enclosure provides NEMA4X/IP66 environmental protection, allowing it to be used in harsh locations.

Thermal Protection

Heat from the equipment mounted within the enclosure is convected naturally and is dissipated by the exterior surfaces of the enclosure. For operating in ambient temperatures up to 55°C (131°F). No fans are installed in the enclosure.

Temperature and relative humidity sensors are built into the SCM remote baseplate to provide continuous reading to the system for monitoring and alarms.

It is recommended to install the enclosure under a sun shade and to leave a minimum of 150 mm (6 in) space between adjacent cabinets or a cabinet and a wall, to allow the flow of air to cool the cabinet.

Cable Entry

Bottom cable entry for power, communication, and field cables is through customer supplied cable glands that maintain the enclosure protection classification, or optional factory fitted Multi Cable Transit (MCT).

Modular Baseplate Mounting

The enclosure contains SCM and Edge I/O module baseplates for mounting system components. System and field power is connected to baseplates from the enclosure power distribution circuits.

Field Termination Assemblies

Termination Assemblies (TAs) are installed on DIN rails. The Edge I/O modules are connected to the TAs with system cables. You can use Schneider Electric or compatible third-party TAs.

Power Distribution Architecture

Two pairs of redundant PSUs use separate customer-supplied power feeds to provide 24 VDC – one pair provides system power and one pair provides field power. Power wiring is routed through the bottom of the enclosure. The input power connects to the primary and secondary entry terminal blocks for main and backup power.

Electrical fuses are monitored by the Fuse Monitoring Unit (FMU) (RH101NL) and an open fuse indication from the FMU is wired into the diagnostic inputs on the SCM baseplate for monitoring and alarm.

Grounding

All enclosure structural elements are integrally grounded by the enclosure design to meet the appropriate industry regulations and standards. The enclosure is equipped with two instrument earth bars. It also has a protective connection point at the outside bottom of the enclosure for customer grounding purposes. Field wiring shields can be terminated either to the TAs or to the instrument ground bus bar. Spare signal wires and shields can be terminated either to the TAs or to the instrument ground bus bar.

Enclosure Diagnostic Alarms

The Remote Mode SCM baseplate has built-in sensors and connectors that provide continuous temperature and humidity measurements of the enclosure, system, and

field power supplies. The SCM baseplate also has four volt-free diagnostic inputs for wiring additional diagnostic signals, such as Fuse Open and Door Open, as well as inputs for monitoring the field PSU's status.

The built-in temperature and humidity sensors and the four diagnostic inputs provide operational visibility and data for predictive maintenance applications without using I/O channels to simplify enclosure design and fabrication.

Enclosure Security

The enclosure is supplied with a front door that can be physically locked with a customer-supplied padlock to provide physical security. The enclosure is also fitted with a door open switch that is alarmed via the diagnostic inputs on the SCM baseplate to notify plant personnel.

Equipment Room Intelligent Enclosure

- NEMA®12/IP43 rating for installation in indoor non-hazardous locations.
- System components are mounted in the front. Field wiring can optionally be mounted in the rear or another enclosure. The enclosure front is separated from the rear by a metal dividing plate.
- The enclosure supports:
  - 256 simplex or redundant I/O mounted in the front with TA's mounted in the rear.
  - 256 simplex or redundant I/O mounted in the front, with an additional 256 simplex or redundant I/O mounted in the rear, to provide a total of 512 I/O with TA's mounted in a separate enclosure.
- Optional Foxboro DCS Field Control Processor (FCP280) provides regulatory control through the Universal I/O modules:
  - FCP280 can connect to a second Equipment Room Enclosure using copper communication cable or optionally connect to Field Mounted Intelligent Enclosure using using an SCM with fiber optic cabling.
  - SCMs connect using copper cabling to the FCP280. SCMs in turn connect to Edge I/O module baseplates using redundant communication cabling.
  - Optional Field Device Controller (FDC280) for integration to third party PLCs using Ethernet based communication protocols, such as Modbus TCP, OPC UA, or Ethernet IP. For more information, see *EcoStruxure™ Foxboro™ DCS Field Device Controller 280 (FDC280)* (PSS 41H-2FDC280).
  - Utility power socket.

Figure 9 - Equipment Room Intelligent Enclosure

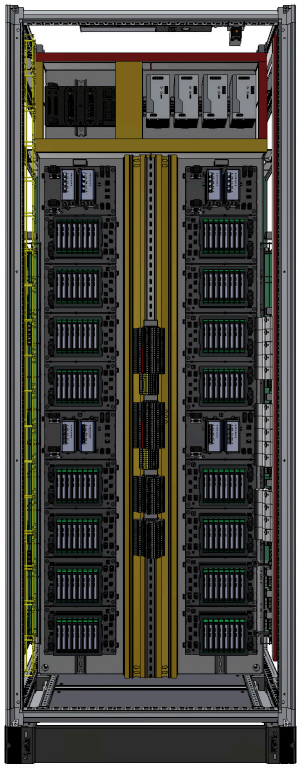

- Optional Field Device Controller (FDC280) for integration to third party PLCs using Ethernet based communication protocols, such as Modbus TCP, OPC UA, or Ethernet IP. For more information, see *EcoStruxure™ Foxboro™ DCS Field Device Controller 280 (FDC280)* (PSS 41H-2FDC280).
- Utility power socket.
- Door handles with keylocks.
- Document pocket inside front door.
- Power distribution for connecting customer-supplied 120 VAC or 230 VAC redundant power feeds.
- Redundant 24 VDC system PSUs.
- Redundant 24 VDC field PSUs.
- Supports the Intelligent Commissioning Wizard, which significantly reduces commissioning effort and shortens the time to plant start-up. For more information, see *EcoStruxure™ Foxboro™ DCS Field Device Expert for HART Devices* (PSS 41S-10FDMHRT).

Environmental Protection

The enclosure is designed for installation in indoor air-conditioned equipment rooms with air quality in line with ISA-S71.04-1985, Environmental Conditions for Process Measurement and Control Systems: Airborne Contaminants, Severity Level G1 (Mild). The metal enclosures provide an outer layer of protection for the control electronics. Other layers are provided by the module housing and conformal coated electronics. This allows only a minimum of contaminants in the plant environment to reach the control components.

Thermal Protection

The enclosure has fans in the front and rear doors to expel air. Temperature and relative humidity sensors are built into the SCM baseplate to provide continuous reading to the system for monitoring and alarms.

Cable Entry

Bottom cable entry for power, communication, and field cables is through cable gland plates. Cable glands must be sealed to maintain the enclosure ingress protection classification.

Modular Baseplate Mounting

The enclosure contains SCM and Edge I/O module baseplates for mounting system components. System and field power is connected to baseplates from the enclosure power distribution circuits.

Field Termination Assemblies

The TAs are installed on DIN rails. The Edge I/O modules are connected to the TAs with system cables. You can use Schneider Electric or compatible third-party TAs.

Power Distribution Architecture

Two independent customer-supplied power feeds are distributed to provide separate redundant 24 VDC for system power and field power, each through two dedicated PSUs. Power wiring is routed through the bottom of the enclosure. The input power connects to the primary and secondary entry terminal blocks for main and backup power. The enclosure supports a third customer-supplied power feed for cabinet lighting and a utility power socket. Enclosure fans are also fed power from the utility supply.

Three power distribution terminal block assemblies (primary, secondary, and utility for powering fans and lights) have dedicated screw clamp terminal blocks for customer main power. Each incoming power feed has a circuit breaker for protection and isolation of the main power, as well as independent secondary circuit breakers for the protection and isolation of each device.

Electrical fuses are monitored by the FMU (RH101NL). An open fuse indication from the FMU is wired into the diagnostic inputs on the SCM baseplate for monitoring and alarm.

Grounding

All enclosure structural elements are integrally grounded by the enclosure to meet the appropriate industry regulations and standards. Two studs (M8 size, one for each enclosure side) provide a protective ground connection point for single enclosures and when baying enclosures together. Field wiring shields are terminated either to the TAs or to the Instrument Earth Bus bar.

Enclosure Diagnostic Alarms

The Remote Mode SCM Baseplate has built-in sensors and connectors that provide continuous temperature and humidity measurements of the enclosure, system, and

field power supplies. The SCM baseplate also has four volt-free diagnostic inputs for wiring additional diagnostic signals, such as Fuse Open and Door Open, as well as inputs for monitoring the field PSU's status.

The built-in temperature and humidity sensors and the four diagnostic inputs provide operational visibility and data for predictive maintenance applications without using I/O channels to simplify enclosure design and fabrication.

Enclosure Security

The enclosure is supplied with front and rear doors fitted with key locks.

Functional Specifications - Edge I/O Module

Supported HART Instrument Types	You can use HART instruments compliant to Version 5, 6, or 7 of the HART specifications.
Input/Output Channels	You can independently configure the software in each I/O channel without taking the module or other channels offline. Each channel is fault isolated with a high immunity to cross interference from other channels.
Analog Inputs	**Voltage** • Range ◦ 0 to 10 VDC • Accuracy ◦ 0.05% of range @25°C ◦ Temp drift < 25 ppm/°C • Over-range capability ◦ Max reading 10 VDC ◦ Tolerant to 30 VDC without damage • Input impedance ◦ > 150 k Ω **Current** (internally or externally powered) • Range ◦ 0 to 20 mA • Accuracy ◦ 0.16% of range @25°C ◦ Temp drift < 25ppm/°C • Over-range capability ◦ Max displayed reading 20.47 mA ◦ Internally powered: Current limited to 22 mA ◦ Externally powered: Current limited to 25 mA ◦ Optional NAMUR NE 43 failure indication <3.7mA or >20.8mA • Input impedance ◦ Approximately 200 Ω (redundant) and 250 Ω (simplex) • Compliance Voltage ◦ Internally powered: 16 VDC available @ 20 mA ◦ Externally powered: 6.6 VDC max @ 20 mA **All analog inputs** • Integration Period ◦ Off, 50 ms, 100 ms, 200 ms, 500 ms, or 1 sec ◦ Configurable per channel • Resolution ◦ 16 bits • Transient Data Recording[a], [b] ◦ Available on all analog input types ◦ 15 bits with no software filtering ◦ 10 ms scan interval, time recorded to 0.5 ms resolution

Analog Outputs	**Current** (Internally powered only) • Range ◦ 0 to 20 mA • Accuracy ◦ 0.25% of range @25°C ◦ Temp drift < 30ppm/°C • Resolution ◦ 13 bits • Max load ◦ 750 Ω • Non-linearity ◦ Included in accuracy • Output DC Impedance ◦ 1 M Ω min
Discrete Inputs	**Dry Contact** • Wetting current ◦ 7 mA • On-Off Threshold ◦ 7.5 VDC (with 0.5 VDC hysteresis) • Headroom ◦ 14 VDC **Wet Contact** • Wetting current ◦ 7 mA (simplex) ◦ 14 mA (redundant) • On-Off Threshold ◦ 7.5 VDC (with 0.5 VDC hysteresis) • Input Impedance @ input signal < 6 VDC ◦ 920 Ω typ. (simplex) ◦ 460 Ω typ. (redundant) **Volts** • On-Off Threshold ◦ Configurable 0.5 to 9.5 VDC in 0.5 VDC steps (with 0.5 VDC hysteresis) • Input Impedance ◦ > 150 kΩ **NAMUR** • Thresholds (based on DIN IEC 60947-5-6) ◦ Open circuit: < 0.05 mA ◦ Off: > 0.35 mA and < 1.2 mA ◦ On: > 2.1 mA and > 360 Ω ◦ Short circuit: < 100 Ω **Count** (available with Dry Contact, Wet Contact, Volts (7.5 V threshold only), and NAMUR) • Range: 0 to 65535 with rollover to zero

	• Max count frequency ◦ Dry contact: 5 kHz (min on time 100 µs) ◦ Wet contact or volts: 20 kHz (min on time 25 µs) ◦ NAMUR: 50 Hz (min on time 10 ms) **Frequency** (available with Dry Contact, Wet Contact, and Volts (7.5 V threshold)) • Range ◦ Dry contact: 1 Hz-5 kHz ◦ Wet contact or volts: 1 Hz-20 kHz • Accuracy: ◦ Typical: 0.25% ◦ Max: 0.52% ◦ Frequencies above 2 kHz: 0.06% or lower • Integration period: Off, 50 ms, 100 ms, 250 ms, 500 ms, or 1 sec (configurable per channel) **Sequence of Events (SOE) Recording** • Discrete Input Types: ◦ All discrete input types supported except when configured for count or frequency • Debounce: ◦ Unconfigurable 4 ms debounce applied to all SOE inputs • Sampling Interval[(a), (b)]: ◦ 5 ms response time for NAMUR or for voltage thresholds other than 7.5 V, measured with a resolution of 0.5 ms ◦ 0.5 ms recording interval
Discrete Outputs (Intended for resistive and inductive loads)	**Low Current** (internally powered High Side Solid State Switch (HSSSS) for load > 600 R) • Max output current ◦ 25 mA • Min Driving Voltage ◦ 17 VDC @ 25 mA **High Current** (internally powered HSSSS) • Max output current ◦ 500 mA per channel, 1 amp dual synchronized channels • Max Internal Voltage Drop (with respect to Field Supply) ◦ 0.5 VDC @ 500 mA
General I/O Specifications	**Update Rate** • Fastest ECB Block Period ◦ 100 ms • Field cabling (HART) distance ◦ 1 mile (1.6 km) (unbalanced transmission), can be extended with Balun device **Isolation** • Functional Isolation: field to system, system to shield, and field to shield.

	• Each channel is fault-isolated and with a high immunity to cross interference from other channels (>75 dB if return of field supply is earthed). • All 16 I/O channels of the same baseplate connect their -ve terminals at the Field Supply return pin of that baseplate. • Each channel is fault isolated from overvoltage up to 300 VAC. **Working Range** • -3 to +30 VDC
Power Requirements	**System Supply** • 24 VDC +5%, -10% • 0.5 W max power consumed per single module **Field Supply** • 24 VDC +5%, -10% • 30 W max utilization per single module • Internal Dissipation: 1.2 W max (offline or standby); 2.4 W max (online and active)
Calibration Requirements	Calibration of the module and termination assembly is not required.
Regulatory Compliance, Electromagnetic Compatibility (EMC)	European EMC Directive 2014/30/EU Meets: EN 61326-1:2013 Class A Emissions and Industrial Immunity Levels
Regulatory Compliance, Product Safety	• Underwriters Laboratories (UL) for U.S. and Canada UL/UL-C listed as suitable for use in UL/UL-C listed Class I, Groups A-D; Division 2; temperature code T4 enclosure-based systems when connected to specified Foxboro DCS processor modules as described in *EcoStruxure™ Foxboro™ DCS Standard and Compact 200 Series Subsystem User Guide* (B0400FA). Communications circuits also meet the requirements for Class 2 as defined in Article 725 of the National Electrical Code (NFPA No.70) and Section 16 of the Canadian Electrical Code (CSA C22.1). Conditions for use are as specified in *EcoStruxure™ Foxboro™ DCS Edge I/O Planning, Installation, and User's Guide* (B0700HX). • *European Low Voltage Directive 2014/35/EU* and *Explosive Atmospheres (ATEX) directive 2014/34/EU* ATEX certified Ex ec IIC T4 Gc for use in certified Zone 2 enclosure when connected to specified I/A Series processor modules as described in *EcoStruxure™ Foxboro™ DCS Edge I/O Planning, Installation, and User's Guide* (B0700HX).
RoHS Compliance	Complies with European RoHS Directive 2011/65/EU, including amending Directives 2015/863 and 2017/2102.

(a) Signal timing varies with input/output characteristics (for example, drive capability and capacitance).

(b) When events are recorded or displayed, the module might show them with reduced time resolution. For example, some events might be displayed only to the nearest 1 ms.

Functional Specifications - Edge I/O Module Baseplate

Power Requirements	Input Voltage Range • 24 VDC +5%, -10% Consumption • 0.1 W (maximum) at 24 VDC
Regulatory Compliance, Electromagnetic Compatibility (EMC)	• *European EMC Directive 214/30/EU* Meets: EN 61326-1:2013 Class A Emissions and Industrial Immunity Levels
Regulatory Compliance, Product Safety	• *Underwriters Laboratories (UL) for U.S. and Canada* UL/UL-C listed as suitable for use in UL/UL-C listed Class I, Groups A-D; Division 2; temperature code T4 enclosure based systems when connected to specified Foxboro DCS processor modules as described in the *EcoStruxure™ Foxboro™ DCS Standard and Compact 200 Series Subsystem User Guide* (B0400FA). Communications circuits also meet the requirements for Class 2 as defined in Article 725 of the National Electrical Code (NFPA No.70) and Section 16 of the Canadian Electrical Code (CSA C22.1). Conditions for use are as specified in the *EcoStruxure™ Foxboro™ DCS Edge I/O Planning, Installation, and User's Guide* (B0700HX). • *European Low Voltage Directive 2014/35/EU and Explosive Atmospheres (ATEX) Directive 2014/34/EU* ATEX (DEMKO) Ex ec IIC T4 Gc for use in certified Zone 2 enclosure when connected to specified I/A Series processor modules as described in the *EcoStruxure™ Foxboro™ DCS Edge I/O Planning, Installation, and User's Guide* (B0700HX).
RoHS Compliance	Complies with *European RoHS Directive 2011/65/EU*, including amending Directives 2015/863 and 2017/2102.

Functional Specifications - System Communication Module

Power Requirements	Input Voltage Range (Redundant) • 24 VDC +5%, -10% Consumption • 5 W (maximum) at 24 VDC Heat Dissipation • 5 W (maximum) at 24 VDC
Calibration Requirements	Calibration of the module is not required.
Vibration	0.75 g (5 to 200 Hz)
Regulatory Compliance, Electromagnetic Compatibility (EMC)	• *European EMC Directive 2014/30/EU* Meets: EN 61326:2013 Class A Emissions and Industrial Immunity Levels
Regulatory Compliance, Product Safety	• *Underwriters Laboratories (UL) for U.S. and Canada* UL/UL-C listed as suitable for use in UL/UL-C listed Class I, Groups A-D; Division 2; temperature code T4 enclosure based systems when connected to specified Foxboro DCS processor modules as described in the *EcoStruxure™ Foxboro™ DCS Standard and Compact 200 Series Subsystem User Guide* (B0400FA). Communications circuits also meet the requirements for Class 2 as defined in Article 725 of the National Electrical Code (NFPA No.70) and Section 16 of the Canadian Electrical Code (CSA C22.1). Conditions for use are as specified in the *EcoStruxure™ Foxboro™ DCS Edge I/O Planning, Installation, and User's Guide* (B0700HX). • *European Low Voltage Directive 2014/35/EU and Explosive Atmospheres (ATEX) Directive 2014/34/EU* ATEX certified Ex ec IIC T4 Gc for use in certified Zone 2 enclosure when connected to specified I/A Series processor modules as described in *EcoStruxure™ Foxboro™ DCS Edge I/O Planning, Installation, and User's Guide* (B0700HX).
RoHS Compliance	Complies with European RoHS Directive 2011/65/EU, including amending Directives 2015/863 and 2017/2102.

Table 1 - SCM Optical Fiber and SFP Modules

	Multi-Mode Fiber (RH107AM)	**Single-Mode Fiber (RH107AL)**
Wavelength	1310 nm	1310 nm
Max Distance	2.48 miles (4 km)	6.21 miles (10 km)
Min Optical Transmitter Output Power	-17 dBm (62.5/125 um) and -21 dBm (50/125 um)	-15 dBm (9/125 um)
Max Optical Transmitter Output Power	-11 dBm (62.5/125 um) and -11 dBm (50/125 um)	-8 dBm (9/125 um)
Receiver Sensitivity	-30 dBm	-34 dBm

For more information on fiber-optic cabling, see *EcoStruxure™ Foxboro™ DCS Standard and Compact 200 Series Subsystem User Guide* (B0400FA).

Functional Specifications - SCM Baseplates

Power Requirements	Input Voltage Range • 24 VDC +5%, -10% Consumption • 0.1 W (maximum) at 24 VDC
Regulatory Compliance, Electromagnetic Compatibility (EMC)	• *European EMC Directive 214/30/EU* Meets: EN 61326-1:2013 Class A Emissions and Industrial Immunity Levels
Regulatory Compliance, Product Safety	• *Underwriters Laboratories (UL) for U.S. and Canada* UL/UL-C listed as suitable for use in UL/UL-C listed Class I, Groups A-D; Division 2; temperature code T4 enclosure based systems when connected to specified Foxboro DCS processor modules as described in the *EcoStruxure™ Foxboro™ DCS Standard and Compact 200 Series Subsystem User Guide* (B0400FA). Communications circuits also meet the requirements for Class 2 as defined in Article 725 of the National Electrical Code (NFPA No.70) and Section 16 of the Canadian Electrical Code (CSA C22.1). Conditions for use are as specified in the *EcoStruxure™ Foxboro™ DCS Edge I/O Planning, Installation, and User's Guide* (B0700HX). • *European Low Voltage Directive 2014/35/EU and Explosive Atmospheres (ATEX) Directive 2014/34/EU* ATEX (DEMKO) Ex ec IIC T4 Gc for use in certified Zone 2 enclosure when connected to specified I/A Series processor modules as described in the *EcoStruxure™ Foxboro™ DCS Edge I/O Planning, Installation, and User's Guide* (B0700HX).
RoHS Compliance	Complies with *European RoHS Directive 2011/65/EU*, including amending Directives 2015/863 and 2017/2102.

Functional Specification - Termination Assembly

Field I/O signals connect to Edge I/O via a DIN-rail-mounted termination assembly (TA).

The Schneider Electric DIN-rail-mounted TAs are available in polyamide (PA) material with compression screw terminations.

A removable system cable connects the DIN rail mounted TA to the Edge I/O Module Baseplate via a connector on the baseplate in which the Edge I/O Modules are installed.

System cables are available in Low Smoke Zero Halogen (LSZH).

System cables are available in a variety of lengths, allowing the TA to be mounted in either the enclosure or in an adjacent enclosure. TAs supporting the -40°C to +70°C are available from Schneider Electric partners. Select the TA that supports the overall solution temperature operating range.

Table 2 - List of Termination Cables Used with the TAs for Edge I/O

I/O Module	Input/Output Signal	TA Part Number PA[a]	Termination Type[b]	TA Cable Type[c]	TA Cert. Type[d]
Edge I/O Module	8 configurable I/O channels, voltage or current, analog or digital. Analog 4 to 20 mA I/O might also have the HART signal superimposed.	RH924WW	C	See LSZH Cables and Part Numbers[a], page 25	1,2

(a) PA is polyamide rated from -20°C (-4°F) to +70°C (+158°F).

(b) C = TA with compression terminals.

(c) For cable part numbers and specifications, see LSZH Cables and Part Numbers[a], page 25.

(d) For TA certification definitions, see Certifications for Termination Assemblies.

Table 3 - Certifications for Termination Assemblies

Type	Certification[a]
Type 1	TAs are UL/UL-C listed as suitable for use in Class I; Groups A-D; Division 2 temperature code T4 hazardous locations. They are DEMKO certified Ex nA IIC T4 Gc for use in Zone 2 potentially explosive atmospheres.
Type 2	TAs are UL/UL-C listed for supplying field circuits Class I; Groups A-D; Division 2 hazardous locations when connected to specified Universal I/O Modules and field circuits meeting entity parameter constraints specified in *EcoStruxure™ Foxboro™ DCS Standard and Compact 200 Series Subsystem User Guide* (B0400FA). They are also ATEX (DEMKO) certified for supplying field circuits for Group IIC, Zone 2 potentially explosive atmospheres. Field circuits are also Class 2 limited energy (60 VDC, 30 VAC, 100 VA or less) if customer-supplied equipment meets Class 2 limits.

(a) All TAs are UL/UL-C listed to comply with applicable ordinary location safety standards for fire and shock hazards. Hazardous location types comply with ATEX directive for II 3 G use. They also comply with the requirements of the European Low Voltage Directive. All listings/certifications require installation and use within the constraints specified in *EcoStruxure™ Foxboro™ DCS Standard and Compact 200 Series Subsystem User Guide* (B0400FA) and the conditions stated in UL and DEMKO reports.

Table 4 - LSZH Cables and Part Numbers[a]

Cable Length	Cable Part Number
0.5 m (0.9 ft)	RH102EM
3.0 m (9.8 ft)	RH102ER
5.0 m (16.4 ft)	RH102ES

(a) Low smoke zero halogen or low smoke free of halogen (LSZH) is a material classification used for cable jacketing. LSZH is composed of thermoplastic or thermoset compounds that emit limited smoke and no halogen when exposed to high sources of heat. Temperature range: -40°C (-40°F) to +105°C (+221°F).

Environmental Specifications

	Operating	Storage
Temperature	Edge I/O Module and System Communication Module • -40°C (-40°F) to +70°C (+158°F) Edge I/O Module Baseplate and SCM Baseplates • Polycarbonate (PC): -40°C (-40°F) to +70°C (+158°F) Termination Assembly • Polyamide (PA): -20°C (-4°F) to +70°C (+158°F)	-40°C (-40°F) to +85°C (+185°F)
Relative Humidity	5 to 95% (non-condensing)	5 to 95% (non-condensing)
Altitude	-300 m (-1,000 ft) to +3,000 m (+10,000 ft)	-300 m (-1,000 ft) to +12,000 m (+40,000 ft)
Contamination	Suitable for use in Class G3 (Harsh) environments, as defined in ISA Standard S71.04, based on exposure testing according to EIA Standard 364-65, Class III.	
Vibration	7.5 m/s^2 (0.75 g) from 5 to 500 Hz	

Physical Specifications - Edge I/O Module

	Module	Termination Assembly
Mounting	Mounts on an Edge I/O module baseplate. See Physical Specifications - Edge I/O Module Baseplate, page 28.	The DIN rail mounted TA mounts on a DIN rail and accommodates multiple DIN rail styles including 32 mm (1.26 in) and 35 mm (1.38 in))
Weight	85 g (2.99 ounce)	DIN Rail Mounted TA • 170 g (5.9 ounce), approximately
Dimensions	Height • 100 mm (3.94 in),108 mm (4.25 in) including lugs Width • 15 mm (0.59 in) Depth • 94 mm (3.7 in) For more detailed dimensions, see Dimensions - Nominal, page 31.	See Dimensions - Nominal, page 31.
Part Numbers	RH101ZC	See Functional Specification - Termination Assembly, page 24.
Termination Cables	Cable Lengths • Up to 5 m (16.4 ft) Cable Materials • Low Smoke Zero Halogen Termination Cable Type • See LSZH Cables and Part Numbers[a], page 25.	
Cable Connection - TA to Baseplate	Edge I/O Module Baseplate End • 25-pin D-subminiature	Termination Assembly End • 25-pin D-subminiature
Field Termination Connections	DIN Rail TA Compression - Type Accepted Wiring Sizes • Solid/Stranded/AWG 0.2 to 4 mm^2/0.2 to 2.5 mm^2/24 to 12 AWG • Stranded with Ferrules 0.2 to 2.5 mm^2 with or without plastic collar	

Physical Specifications - Edge I/O Module Baseplate

Mounting	Baseplates mount using the supplied DIN rail adapter (TME21821) on a non-isolated, mechanically supported, vertical DIN rail mounted inside an enclosure.
Weight (without modules)	812 g (28.6 ounces), approximately
Dimensions	Height • 149 mm (5.87 in) Width • 218 mm (8.58 in), 226 mm (8.89 in) with lugs Depth • 104 mm (4.1 in), 124 mm (4.88 in) with I/O module fitted For more detailed dimensions, see Dimensions - Nominal, page 31.
Construction	Material • PC (polycarbonate), inflammability UL94 V0 Color • Gray

Physical Specifications - System Communication Module

Mounting	The SCM mounts on baseplates specifically designed for the SCMs different operating modes. **NOTE:** SCM cannot be mounted on existing 200 Series baseplates, and different connectors and keying are used to help prevent this.
Weight	300 g (10.58 oz), approximately
Dimensions	Height • 99 mm (3.96 in), 114 mm (4.5 in) including lugs Width • 44 mm (1.75 in) Depth • 115 mm (4.52 in) For more detailed dimensions, see Dimensions - Nominal, page 31.
Indicators (mounted on front of module)	The module operational status of the SCM is indicated by red and green LEDs. The redundancy status is indicated by yellow LEDs. The status of communication to the FCP280 (System Network) and to Edge I/O modules (Module Network) are indicated by yellow LEDs. The status of communication using fiber-optic connections (link 1 to 4) are indicated by yellow LEDs.

Physical Specifications - SCM Baseplates

Mounting	Baseplates mount using the supplied DIN rail adapter (TME21821) on a non-isolated, mechanically supported, vertical DIN rail mounted inside an enclosure.
Weight (without modules)	760 g (26.8 oz), approximately
Dimensions	Height • 149 mm (5.87 in) Width • 218 mm (8.58 in) Depth • 47 mm (1.86 in), 126 mm (4.96 in) with module For more detailed dimensions, see Dimensions - Nominal, page 31.
Construction	Material • PC, inflammability UL94 V0 Color • Gray

Dimensions - Nominal

Figure 10 - Edge I/O Module (RH101ZC)

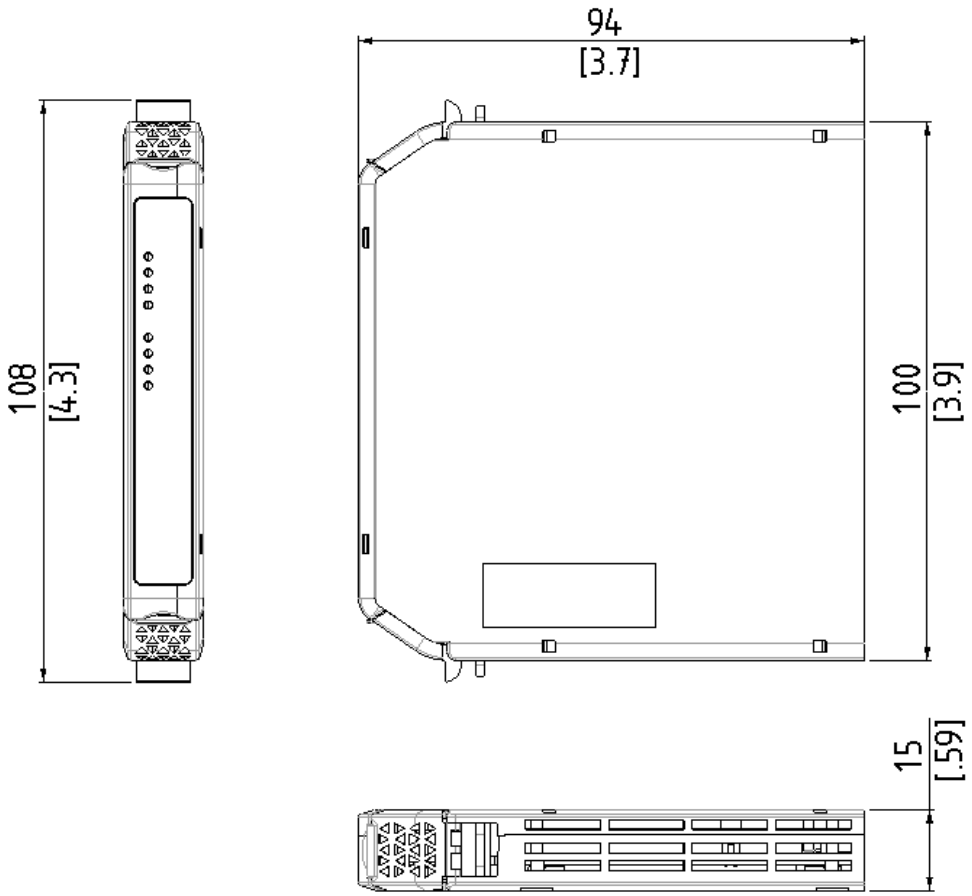

Figure 11 - Edge I/O Module Baseplate, Left (RH101ZL)

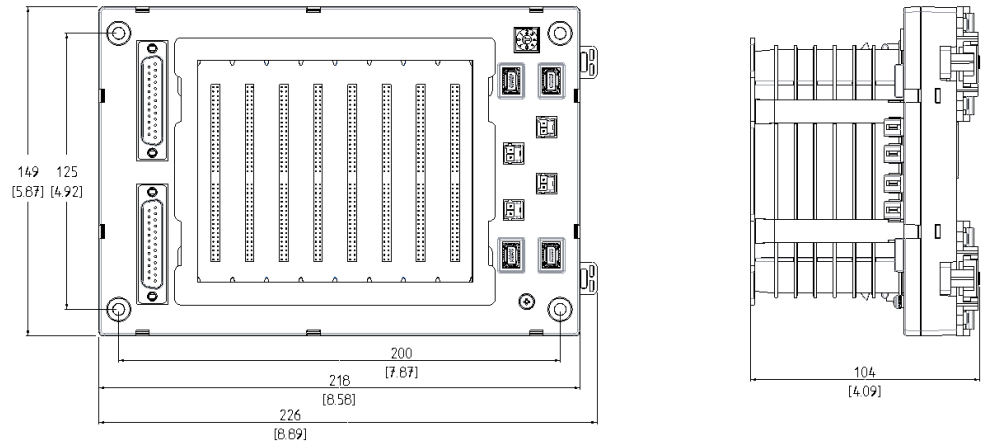

Figure 12 - Edge I/O Module Baseplate, Right (RH101ZU)

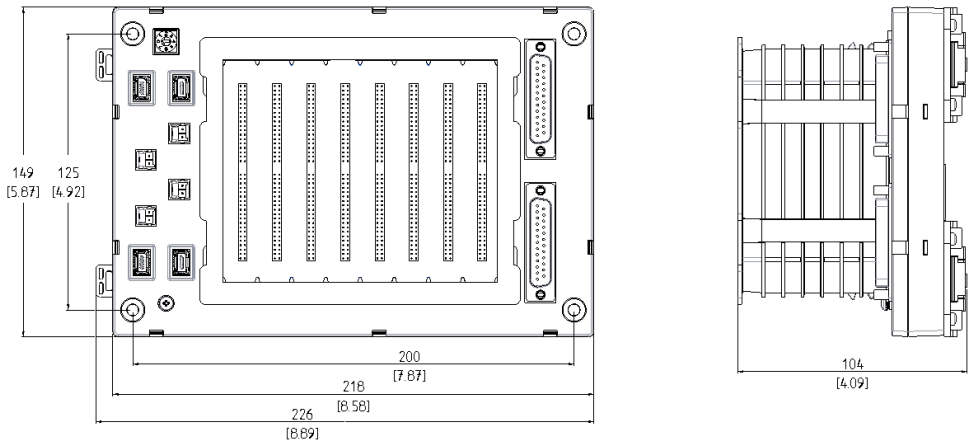

Figure 13 - Edge I/O Module and Baseplate Fitted on DIN Rail

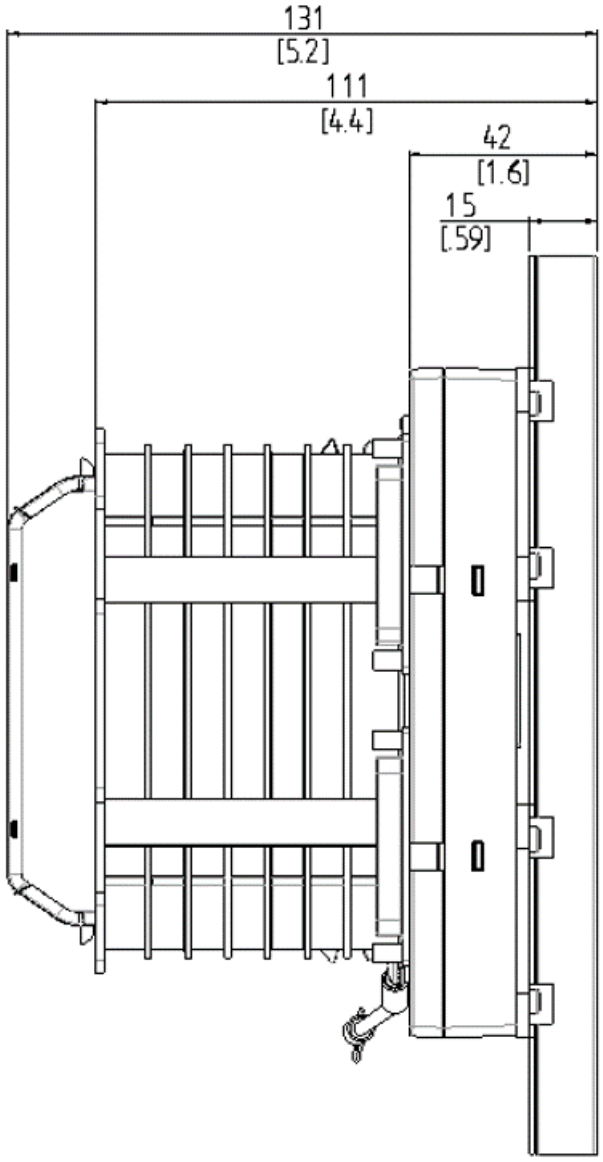

Figure 14 - System Communication Module (RH101YW)

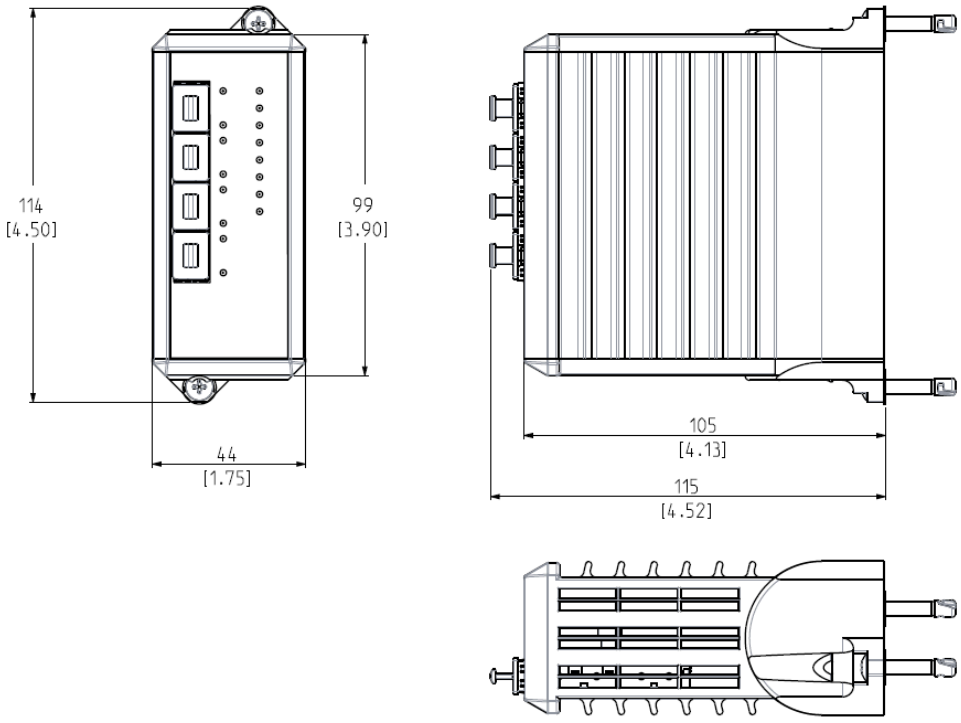

Figure 15 - SCM Baseplate (RH101VH, RH101VJ, RH101VF)

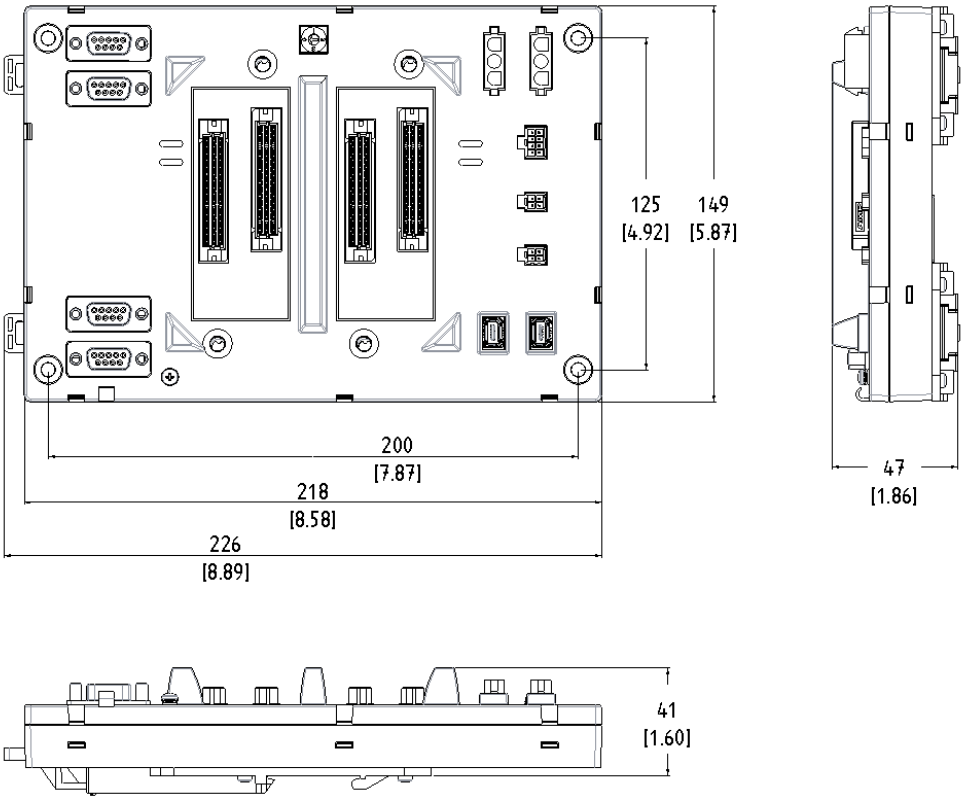

Figure 16 - SCM and Baseplate Fitted on DIN Rail

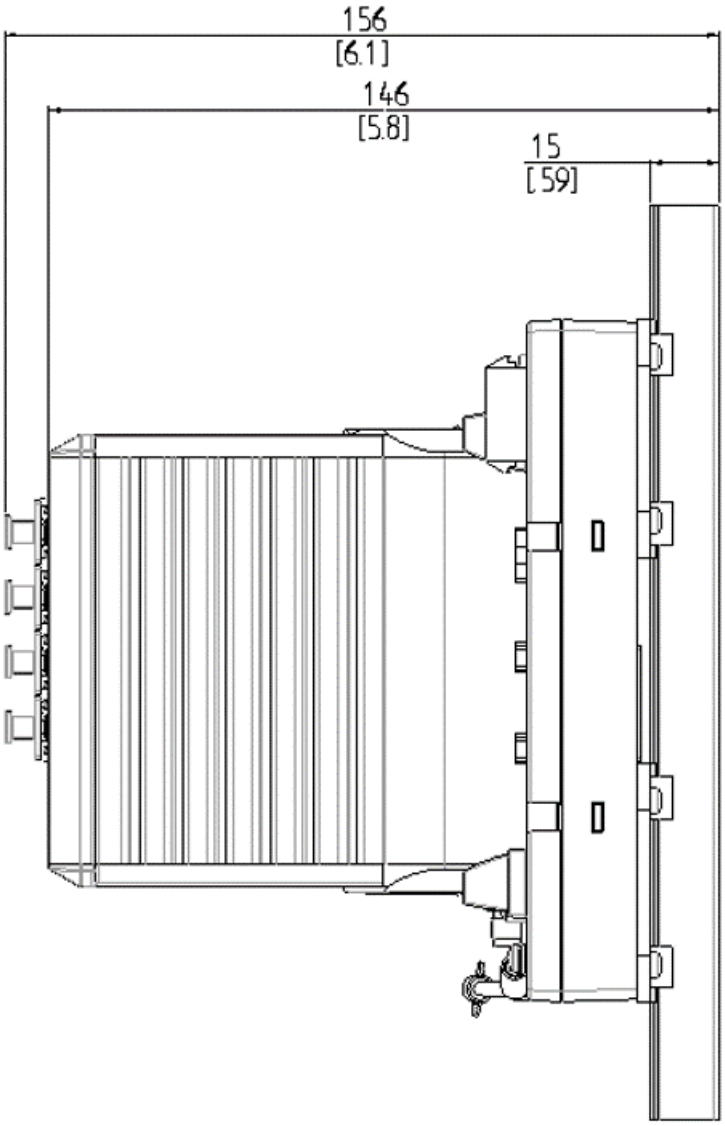

Figure 17 - Termination Assembly (RH924WW)

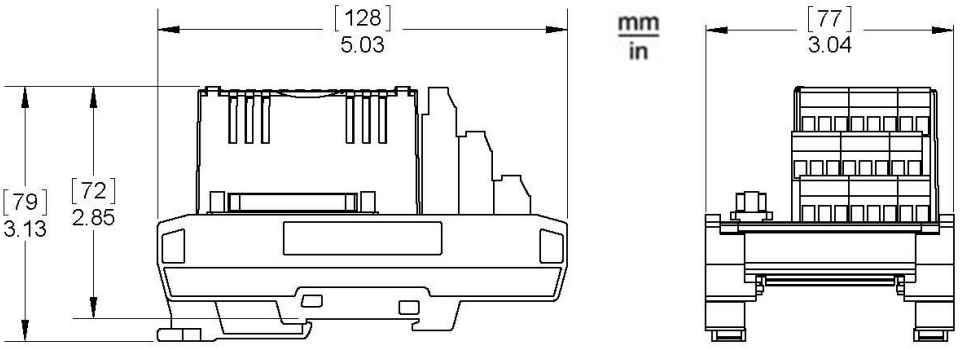

For more information, see *EcoStruxure™ Foxboro™ DCS Standard and Compact 200 Series Subsystem User Guide* (B0400FA).

Edge I/O Solution Part Numbers

Table 5 - Edge I/O Module Related Part Numbers

Part Number	Description
RH101ZC	Edge I/O 4 Channel Universal I/O Module (Single Module)
RH101ZL	Edge I/O Module Baseplate (Left)
RH101ZU	Edge I/O Module Baseplate (Right)
RH107AK	Module Network Terminator Assembly
RH107CU	Edge I/O Module Network Cable Assembly 0.25 m
RH107CV	Edge I/O Module Network Cable Assembly 0.5 m
RH102EM	Edge I/O System Cable 0.5 m
RH102ER	Edge I/O System Cable 3 m
RH102ES	Edge I/O System Cable 5 m

Table 6 - System Communication Module Related Part Numbers

Part Number	Description
RH101YW	System Communications Module (Single Module)
RH101VH	Remote Mode SCM Baseplate
RH101VJ	Quad Mode SCM Baseplate
RH101VF	Star Mode SCM Baseplate
RH107AL	SCM Single-Mode Fiber SFP Module
RH107AM	SCM Multi-Mode Fiber SFP Module

For 200 Series baseplate and power cables, see *EcoStruxure™ Foxboro™ DCS Standard and Compact 200 Series Subsystem User Guide* (B0400FA).

Related Documents

B0700HX	*EcoStruxure™ Foxboro™ DCS Edge I/O Planning, Installation, and User's Guide*
B0700XF	*EcoStruxure™ Foxboro™ DCS Edge I/O Series Subsystem Agency Safety Certifications Guide*
B0400FA	*EcoStruxure™ Foxboro™ DCS Standard and Compact 200 Series Subsystem User's Guide*
B0700FB	*EcoStruxure™ Foxboro™ DCS Standard and Compact 200 Series Subsystem Agency Safety Certifications Guide*
B0400FF	*EcoStruxure™ Foxboro™ DCS HART Communication Interface Modules User's Guide*
B0700WN	*EcoStruxure™ Foxboro™ DCS Edge I/O Typical Wiring Schematics Customer Drawings*
B0700WP	*EcoStruxure™ Foxboro™ DCS Edge I/O Equipment Room Customer Drawings*
B0700WQ	*EcoStruxure™ Foxboro™ DCS Edge I/O Field Mounted Enclosure Customer Drawings*
B0700JV	*Foxboro™ DCS SOE/TRA Suite (STS) User Guide*
B0700JW	*Foxboro™ DCS SOE/TRA Suite (STS) Installation Guide*
B0700JX	*Foxboro™ DCS High Speed Control Software (HSCS) Collector User Guide*
B0700JY	*Foxboro™ DCS High Speed Control Software (HSCS) Collector Installation Guide*
PSS 41H-2COV	*EcoStruxure™ Foxboro™ DCS Compact 200 Series I/O Subsytem Overview*
PSS 41H-1FCP280	*EcoStruxure™ Foxboro™ DCS Field Control Processor 280 (FCP280)*
PSS 41S-10FDMHRT	*EcoStruxure™ Foxboro™ DCS Field Device Expert for HART Devices*
PSS 41H-2SOV	*EcoStruxure™ Foxboro™ DCS Standard 200 Series Subsystem Overview*

Proposition 65

WARNING: This product can expose you to chemicals including lead and lead compounds, which are known to the State of California to cause cancer and birth defects or other reproductive harm. For more information go to www.P65Warnings.ca.gov.

Schneider Electric Systems USA, Inc.
70 Mechanic Street
Foxborough, Massachusetts 02035–2037
United States of America

Global Customer Support: https://pasupport.se.com

As standards, specifications, and design change from time to time, please ask for confirmation of the information given in this publication.

© 2025–2026 Schneider Electric. All rights reserved.

PSS 41H-2EDGE-IO, Rev B