Foxboro™ DCS

Compact 200 Series I/O Subsystem Overview

Product Specification

PSS 41H-2COV, Rev C

December 2025

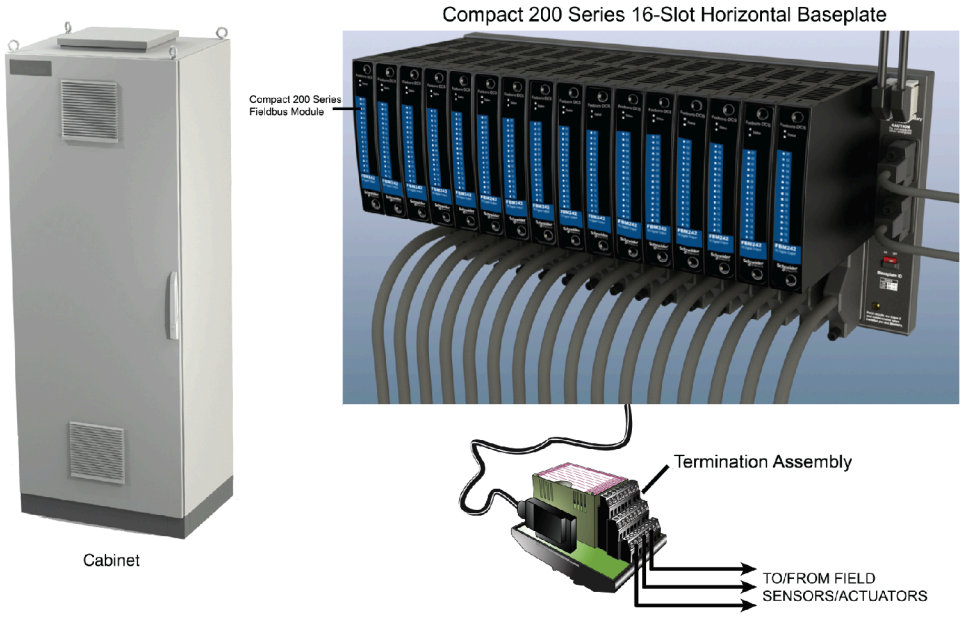

https://www.se.com

Legal Information

The information provided in this document contains general descriptions, technical characteristics and/or recommendations related to products/solutions.

This document is not intended as a substitute for a detailed study or operational and site-specific development or schematic plan. It is not to be used for determining suitability or reliability of the products/solutions for specific user applications. It is the duty of any such user to perform or have any professional expert of its choice (integrator, specifier or the like) perform the appropriate and comprehensive risk analysis, evaluation and testing of the products/solutions with respect to the relevant specific application or use thereof.

The Schneider Electric brand and any trademarks of Schneider Electric SE and its subsidiaries referred to in this document are the property of Schneider Electric SE or its subsidiaries. All other brands may be trademarks of their respective owner.

This document and its content are protected under applicable copyright laws and provided for informative use only. No part of this document may be reproduced or transmitted in any form or by any means (electronic, mechanical, photocopying, recording, or otherwise), for any purpose, without the prior written permission of Schneider Electric.

Schneider Electric does not grant any right or license for commercial use of the document or its content, except for a non-exclusive and personal license to consult it on an "as is" basis.

Schneider Electric reserves the right to make changes or updates with respect to or in the content of this document or the format thereof, at any time without notice.

To the extent permitted by applicable law, no responsibility or liability is assumed by Schneider Electric and its subsidiaries for any errors or omissions in the informational content of this document, as well as any non-intended use or misuse of the content thereof.

Overview

The EcoStruxure™ Foxboro DCS™™ Compact 200 Series I/O Subsystem is an environmentally rugged set of control electronics that can be distributed throughout your plant. This permits significant reduction in field cabling and associated raceway and conduit installation, thereby reducing the initial cost of the installation. The Compact 200 Series I/O subsystem is fully compatible with existing 200 Series I/O equipment and/or legacy 100 Series I/O equipment.

The Compact 200 Series I/O subsystem provides innovative equipment packaging, together with the integrated use of Fast Ethernet networks for communication between equipment domains. This permits local or remote distribution of your process I/O points.

The Compact 200 Series I/O subsystem consists of a number of high performance Compact 200 Series Foxboro DCS Fieldbus Modules (FBMs) along with these integrally designed elements:

- Foxboro DCS Field Control Processor 280 (FCP280) – A compact module that provides a control interface between the FBMs and the control network and allows you to locate the control processor in strategic plant areas.
- FBI200 Fieldbus Isolator/Filter - These optional modules, among other functions, extend the Module Fieldbus between FCP280s and 200 Series FBMs up to 305 m (1000 ft) over twinaxial cable.
- Compact 200 Series Baseplate – This provides a communications backplane and a solid base for mounting the Compact 200 Series FBMs, allowing for horizontal DIN rail mounting configurations.
- Enclosures – Several basic types provide various levels of environmental protection and equipment grouping for the 200 Series equipment.

The Compact 200 Series FBMs provide support for analog measurement, digital sensing, and analog or discrete control capabilities. The Compact FBMs are rugged, high performance, distributed process I/O modules designed for process control tasks. Operating in conjunction with the Foxboro control processor, these FBMs provide for process management and control of continuous, batch, and discrete control schemes.

Features

- Allows you to locate control processor and field input/output modules in strategic plant areas
- High performance, reduced size Compact FBMs
- Enclosures to provide various levels of environmental protection
- Compact 200 Series baseplate and Compact 200 Series FBMs reduce equipment footprint over the Standard 200 Series subsystem
- Use with standard 200 Series baseplates as described in this PSS
- Optional redundant power
- High performance, high accuracy, fast updates
- Reduced component count, for ultra-high reliability and quality
- Optional fault tolerant control processors
- Harsh (Class G3 - ISA S71.04) contamination protection
- Distributed local and/or remote I/O
- Power security and alarming
- Electrical isolation and field device power
- High-speed system communication

High Performance, High Accuracy, Fast Updates

The FBMs offer high resolution, high accuracy, and repeatable design. The Sigma-Delta, fast integrating analog-to-digital converter used on the analog inputs provides new readings as fast as every 25 ms, suitable for high-speed regulatory control applications. The analog inputs use a built-in configurable moving average filter that efficiently removes process electromagnetic noise.

Reduced Component Count for Ultra-High Availability

The logic functions (I/O process, I/O specific logic, communication processor, and other inter-connecting logic functions) are integrated into a single Application Specific Integrated Circuit (ASIC). The use of ASIC:

- Reduces the number of components in the module
- Reduces the size of the module
- Reduces the heat generated by the module
- Reduces the cost of the module
- Produces a module having ultra-high reliability and quality

Most single modules have an expected availability of about 0.999974 [on the basis that the module resides in a baseplate with redundant power, and a mean time to repair (MTTR) of two hours].

The optionally redundant modules have an expected availability above 0.9999964 (on the basis that the module resides in a baseplate with redundant power, and a MTTR of two hours). The redundancy of the module pair, coupled with the high coverage of detected faults, provides a very high subsystem availability time.

Optional Redundancy

The Compact 200 Series I/O subsystem is optionally available with total redundancy, for high availability. Redundancy is available for the:

- Power supplies
- Control network
- Control processors
- Modular Fieldbus cables between baseplates
- Certain Compact 200 Series FBM I/O module types

Reduced Volume

The Compact 200 Series baseplate and the Compact 200 Series FBMs have a reduced footprint compared to the standard 200 Series modular baseplate and standard 200 Series FBMs. One Compact 200 Series baseplate (and its sixteen Compact 200 Series FBMs) needs less space than two standard 200 Series modular baseplates (and their sixteen standard FBMs).

Rugged Packaging

The 200 Series FBMs (Compact and Standard) are packaged as plug-in modular assemblies.

The Compact 200 Series FBMs have a molded plastic exterior. The maximum operating temperature for Compact 200 Series FBMs is up to 60°C (140°F). See Table 1 for each Compact 200 Series FBM product specification.)

Electrical Certifications

The Compact 200 Series I/O subsystem has these product safety certifications:

- Underwriters Laboratories (UL) listing for both US (NRTL) and Canadian (UL-C) requirements for both ordinary and hazardous locations
- ATEX (DEMKO) certification for use in potentially explosive atmospheres
- CE Marked, compliant with the Low Voltage Directive, the EMC Directive, and the ATEX Directive.
- RoHS compliant
- Certain Compact 200 Series FBM I/O modules are China RoHS and California Prop 65 RoHS Compliant

As well, the Compact 200 Series subsystem is Marine Certified. See *Standard and Compact 200 Series I/O Marine Certifications* (PSS 41H-MARCERT) for details.

For additional information about the Compact 200 Series I/O subsystem certifications, see Related Product Documents, page 22.

Compact Baseplate Module Mounting

The Compact 200 Series FBMs mount on specially designed Compact 200 Series baseplates (Compact 200 Series 16-Slot Horizontal Baseplate, page 8), which fasten

to a structurally supported non-isolated horizontal DIN rail for mounting inside or outside an enclosure. (As an alternative to DIN rail mounting, a mounting plate can be used for horizontal mounting of the Compact 200 Series baseplate on a 19-inch rack). The Compact 200 Series baseplate provides increased overall system installation functionality by providing unit increments of 16 module positions with various operational functionality in combination with horizontal mounting. The Compact 200 Series baseplates can thus be mounted in small, distributed cabinets or in a variety of other mounting configurations.

The Compact 200 Series baseplates include:

- Primary and secondary 24 V dc power connections
- Two Module Fieldbus communications connections (for A and B Module Fieldbus daisy chain)
- Power connection and field I/O connection for each FBM
- DIP switch for baseplate identification
- A/B Module Fieldbus splitter/terminator connection
- Adding additional baseplates without removing the system from service (needs redundant HDLC module fieldbus)

Any Compact 200 Series FBM can be removed from its baseplate without removing or disturbing external field device wire terminations or internal cable terminations or connections.

Shielded twisted-pair Fieldbus cables for Compact 200 Series baseplate interconnections are available in various lengths of 0.12 m (4.75 in) up to 60 m (198 ft). The twisted-pair cable length interconnecting all baseplates is up to 60 m (198 ft). Before installing or removing 200 Series equipment, refer to *Standard and Compact 200 Series Subsystem User's Guide* (B0400FA).

Figure 1 shows the Compact 200 Series baseplate. It supports the Compact 200 Series FBMs only. See *Compact 200 Series 16-Slot Horizontal Baseplate* Product Specification (PSS 41H-2C200) for additional information on this baseplate.

Figure 1 - Compact 200 Series 16-Slot Horizontal Baseplate

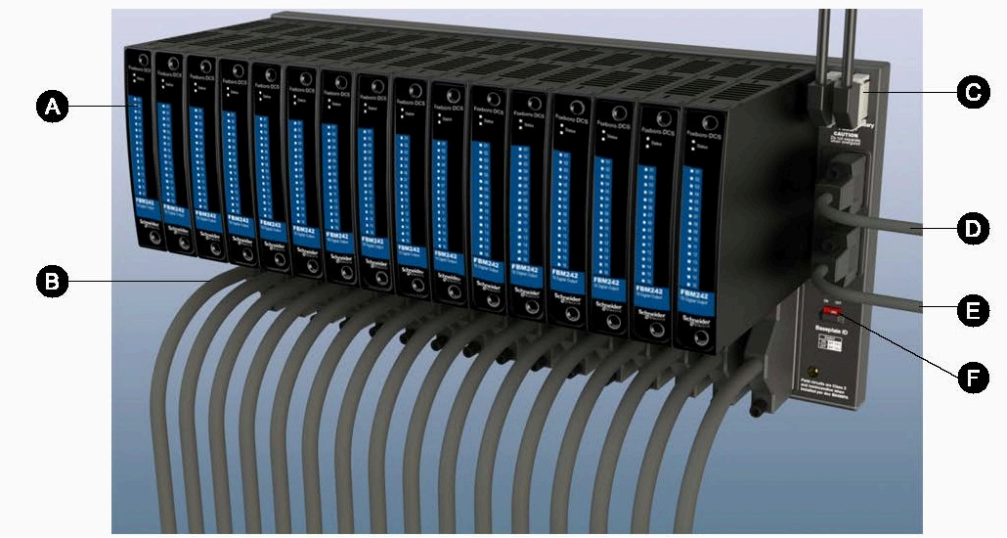

Letter	Description
A	Compact 200 Series Fieldbus Modules
B	Termination Assembly Connectors
C	Power Cables (Redundant)
D	Module Fieldbus Cable (from CP or previous baseplate)
E	Module Fieldbus Cable (to next baseplate or, if the end of the baseplate chain, terminator RH916RB)
F	Baseplate addressing switch

Compact 200 Series Baseplate Configurations

The Compact 200 Series I/O subsystem supports either:

- The use of Compact 200 Series baseplates exclusively
- A mix of standard 200 Series modular baseplates and Compact 200 Series baseplates

Acceptable example configurations are shown in Figure 2.

Figure 2 - Example Configurations with Compact and Standard 200 Series Baseplates

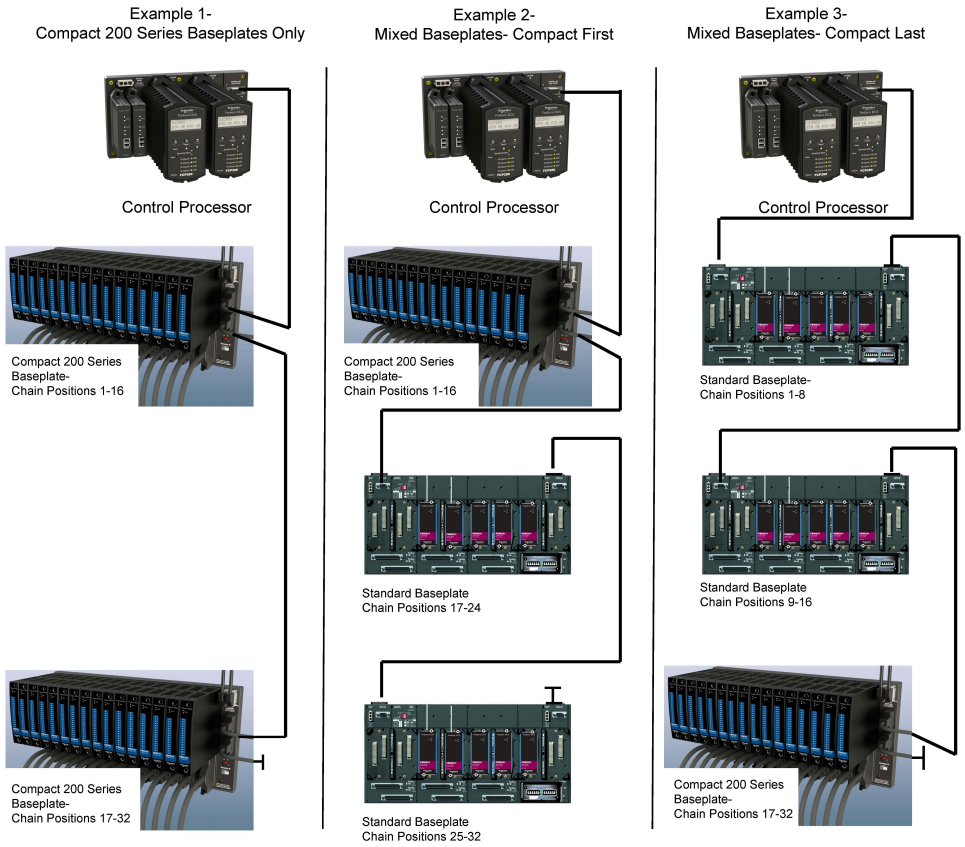

Field I/O Terminations

Field I/O signal connections are made at termination assemblies (TAs) mounted on DIN rails within or external to the enclosure. TAs are connected to the associated baseplate by dedicated cables, which can be 0.5 m (1.7 ft) up to 30 m 100 ft) in length. These differing cable lengths allow TAs to be mounted in the same enclosure as the FBMs, or in an adjacent enclosure.

Analog and discrete I/O FBMs are used with specific TAs to handle a variety of input/output signals. TAs with built-in relays are available for switching high voltage and high current digital outputs. Some TAs read back the state of the contacts to confirm the state of the relay.

Enclosures

Enclosures extend the design of the 200 Series FBMs by providing a range of mounting options to match application requirements.

The G-Series enclosures are floor-standing units which accommodate baseplates for mounting FBMs, FCP280s, and/or termination assemblies or terminal blocks for marshalling. The G-Series enclosures that support Compact 200 Series I/O subsystem equipment (G13 and G14) are available for use in ordinary (IP 43/54) rated environments.

Several product lines of metal enclosures are offered with the Compact 200 Series I/O subsystem:

- G-Series 800x800 Front and Rear Access Compact Enclosures (G13 system enclosure, G14 system and termination enclosure)
- G-Series 800x800 Front and Rear Access Enclosures (G11 termination enclosure)

Each of the enclosures includes DIN rails for mounting equipment, power supplies, and terminal blocks for connection of line power, utility power, and dc power distribution. For additional information regarding each enclosure, see *G-Series Enclosures Overview* Product Specification (PSS 41H-2GOV).

Distributed Local/Remote Mounting

Innovative design of the equipment packaging allows the Compact 200 Series FBMs to be distributed closer to the process without special environmentally conditioned control or equipment rooms. Multiple control network configurations can be designed using the Ethernet fiber optic cables and switches. This allows construction of small-to-large size systems located within one or more mounting areas.

Figure 3 shows basic network configurations that can be implemented for the Compact 200 Series I/O subsystem. Each of these configurations offer connection to Ethernet switches, allowing the FBMs to be remotely mounted with the field control processor (FCP280).

The Field Control Processor configuration (Figure 3) can be used where:

- Groupings of FBMs are concentrated in a more localized area
- Groupings of FBMs are located in the same enclosure as the FCP280.

This control network configuration thus allows distribution of the FBMs over a wide plant area.

The FBI200 is used with FCP280 to extend the distance of a 2 Mbps or 268 Kbps HDLC fieldbus. It is not needed for filtering and isolation with the FCP280.

Figure 3 - Compact 200 Series I/O Subsystem, Typical FCP280 Configuration (Conceptual)

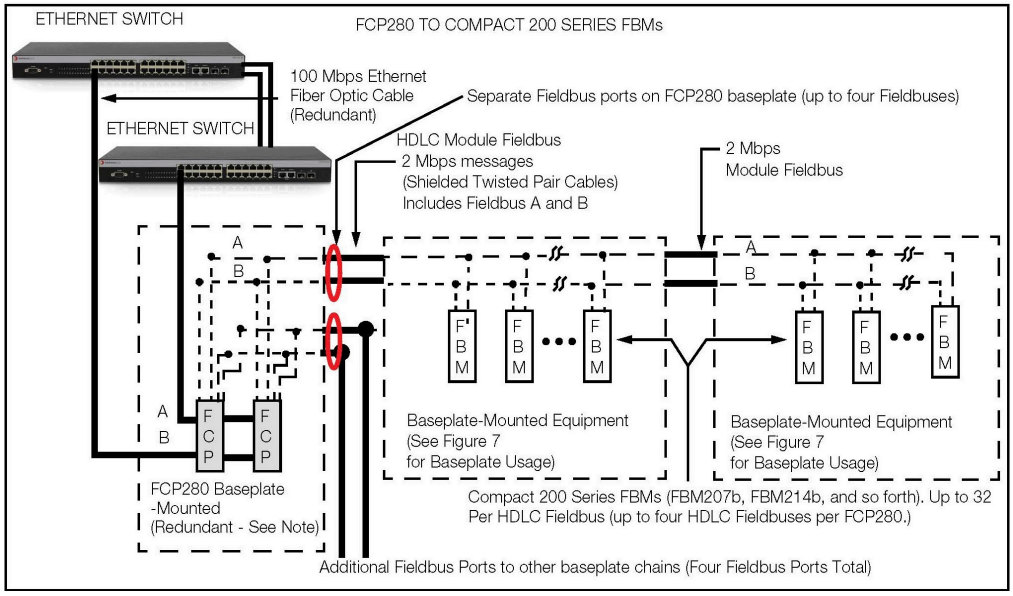

NOTE: The FDC280 communicates with DIN Rail Mounted FBMs and 100 Series FBMs or Competitive Migration Modules via separate fieldbus ports (dual baud functionality), as described in *Field Control Processor 280* Product Specification (PSS 41H-1FCP280).

FCM2F Fieldbus Communications modules (see Figure 4) provide baseplate-to-baseplate fiber optic extension of the Module Fieldbus. This allows Compact 200 Series FBMs to be locally, or remotely distributed in multiple enclosures for cost-effective placement of input/output points.

The three versions of the FCM2Fs – FCM2F2, FCM2F4, and FCM2F10 – offer three different maximum baseplate-to-baseplate fiber optic cabling distances: up to 2 km (1.24 mi), up to 4 km (2.48 mi), and up to 10 km (6.2 mi), respectively. FCM2F2 and FCM2F4 are used with multimode graded-index fiber cable, and FCM2F10 is used with single-mode fiber cable.

The FCM2Fs are mounted on the baseplates in pairs for redundancy, one each for the “A” and “B” cables of the Fieldbus. Non-redundant configurations need only a single FCM2F.

Figure 4 - Compact and Standard 200 Series Baseplate Interconnections Using Fiber Optic Cable

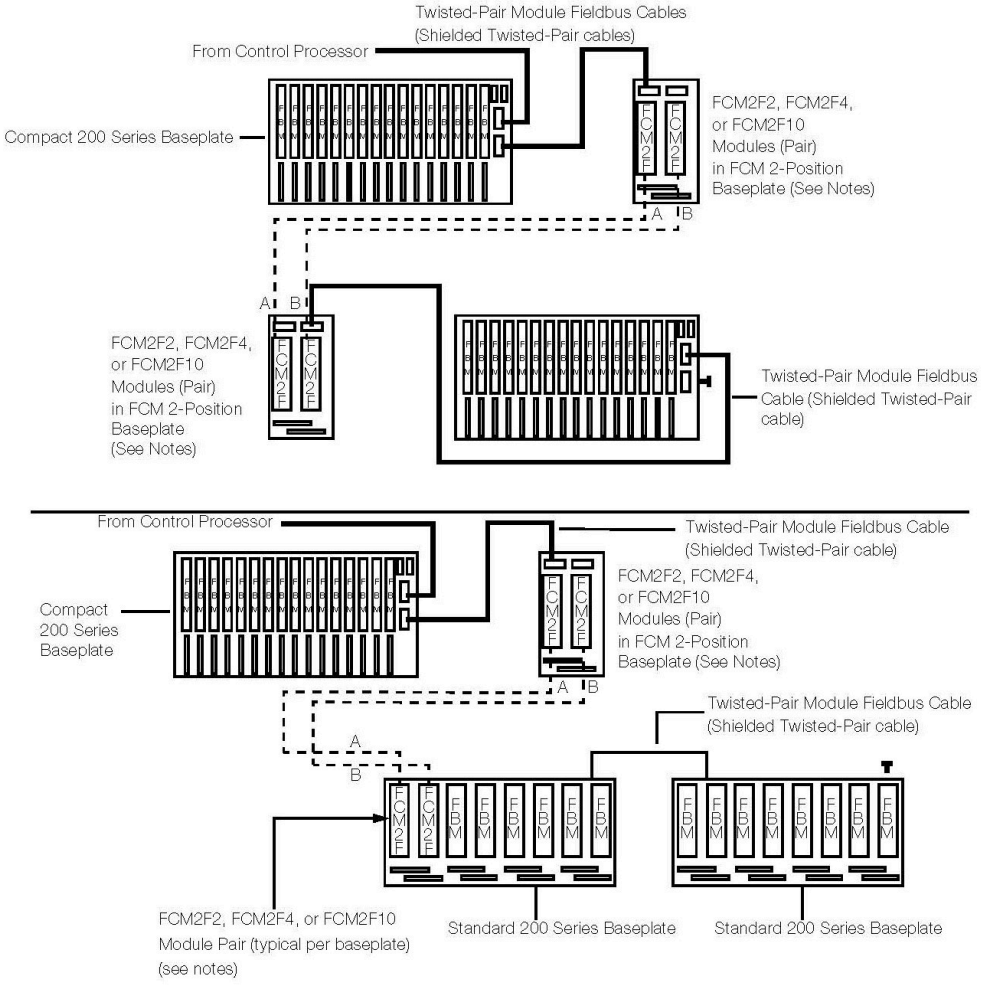

NOTE:

- Redundant configuration is shown. Non-redundant configuration uses one FCM2F per baseplate, connected to either Fieldbus “A” or “B”. Up to two pairs of FCM2Fs are allowed in series; two sets of two FCM2F10s allow up to 20 km (12.4 mi) total distance for the Fieldbus.
- Three versions of the FCM2F provide three different fiber optic cabling distances:
  - FCM2F2 = 2 km (1.24 mi)
  - FCM2F4 = 4 km (2.48 mi)
  - FCM2F10 = 10 km (6.2 mi)

Compact 200 Series Baseplate Implementation

The Compact 200 Series baseplate mounting of the Compact FBMs provides added versatility in applications. These baseplates are interconnected by shielded module Fieldbus cables. Figure 5 shows basic baseplate configuration using shielded twisted-pair connections. Optional redundant cables for the Module Fieldbus can be used by connecting the cables to A/B Module Fieldbus splitter/terminators.

This configuration is used when the Compact 200 Series baseplates are mounted within an enclosure or enclosures in the same location (for example, in multiple

enclosures in the same area). Shielded twisted-pair cables (for interconnecting the Compact 200 Series baseplates) are available in lengths of 0.12 to 60 meters.

Figure 5 - Compact 200 Series Baseplate Implementation Example

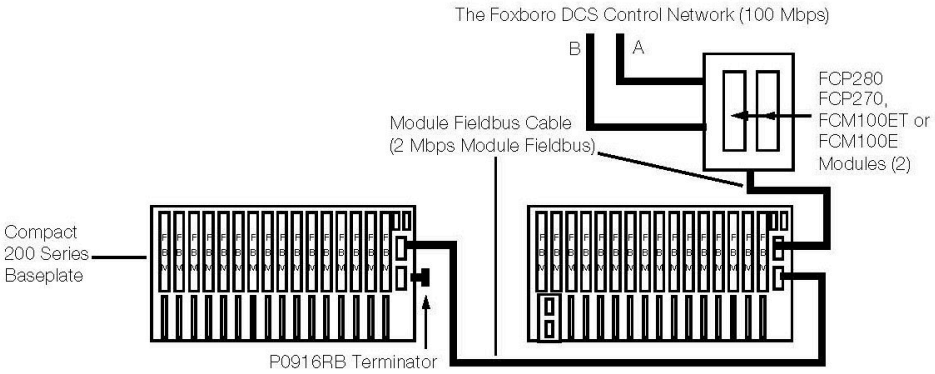

NOTE:

- Fieldbus Module quantity is listed in Functional Specifications.
- Total cable run of entire 2 Mbps Module (HDLC) Fieldbus is up to 60 m (198 ft), which includes any cabling to FBI200, if present.
- Up to four of these baseplate chains can be connected to the FCP280 baseplate with four HDLC fieldbuses.

Standard 200 Series Subsystem Upgrade

Existing standard 200 Series subsystems can be updated to use the equipment in the Compact 200 Series I/O subsystem.

Standard horizontal 200 Series baseplates can be removed and replaced with Compact 200 Series horizontal baseplates. See *Standard 200 Series Baseplates* Product Specification (PSS 41H-2SBASPLT) for the dimensions of the standard 200 Series baseplates, and to *Compact 200 Series 16-Slot Horizontal Baseplate* Product Specification (PSS 41H-2C200) for the dimension of the Compact 200 Series baseplates. When planning this upgrade, verify that:

- There are sufficient horizontal DIN rails available in the desired mounting location to support the Compact 200 Series baseplates.
- Sufficient power is provided for the Compact 200 Series baseplates. These baseplates support power from the FPS480-24, FPS400-24, FPS240-24, or FPS120-24 power supplies. For custom enclosures, select the appropriate power supplies based upon the power budget within your enclosure.
- There are sufficient cooling systems in the enclosure for the Compact 200 Series baseplates. One fan tray is needed for every two *adjacent* Compact 200 Series baseplates. “Adjacent” means that there is one Compact 200 Series baseplate located directly above the lower Compact 200 Series baseplate. If the Compact 200 Series baseplates are distributed throughout the enclosure, then one fan tray is needed per Compact 200 Series baseplate.

As well, the standard termination cables for the standard 200 Series FBMs need to be replaced with the cables listed in the “Cable Types and Part Numbers” tables in the equivalent Compact 200 Series FBMs’ Product Specifications listed in Table 1.

The control processors and other support hardware for the Compact 200 Series equipment need to be installed in accordance with the requirements listed in Functional Specifications, page 21.

Power Supply and Earthing

Grounding to Earth

Earthing (grounding) practices for enclosures and the subsystem must meet the earthing practices and requirements of:

- IEC 61000-5-1 General Considerations, and
- IEC 61000-5-2 Earthing and Cabling (or local equivalents)

The 24 V dc power supplies (FPS480-24, FPS400-24, FPS240-24, and FPS120-24) are agency certified for use in Class I, Division 2 applications.

For each FBM enclosure, you can select single or redundant power distribution. A single power distribution configuration consists of a single power supply and single power distribution to the Compact 200 Series baseplates.

A redundant power distribution configuration consists of redundant power supplies and redundant power distribution to the 200 Series baseplates. This helps provide power security upon detected power module failure for process loops where continued operation is necessary. The dual power feed distribution network helps protect against any detected single-point power failures, and helps protect all modules against detected power main failures and internal short circuits.

The power supplies must be earthed.

Power Alarming

Failure of a single or redundant 24 V dc power supply is detected by each Compact FBM. If a power supply failure is detected:

- The color of the module’s icon on the equipment displays in SMDH is changed
- Power status messages are displayed on the System Monitor display
- A system message is printed

Since the host loses communication with the module(s), the color of the host module’s icon in SMDH is changed. All of the changes occur when these failures are detected:

- A single power supply system
- A single power supply in a redundant system, if configured for alarming
- Both power supplies in a redundant system

Electrical Isolation and Field Device Power

Electrical isolation and field device power are functions of the individual FBM types. The various FBM types provide, on an individual basis, channel isolated analog inputs and outputs, differential analog inputs, channel isolated digital inputs and outputs, and group isolated digital inputs. The FBMs also provide the necessary field device power for analog transmitters, current to pressure (I/P) converters, contact sensing, and solid state switch or relay drive.

The three levels of isolation available with specific FBMs are:

- Channel Isolated – Each channel is galvanically isolated from all other channels, earth (ground) and module logic. Isolated inputs and outputs use a per point isolated power supply, built into the FBM, for each channel.
- Differential Isolated – Each channel has a differential input to allow voltage differences between channels without introducing issues. The channels are not galvanically isolated from each other, but are galvanically isolated from earth (ground) and module logic. Differential group isolated inputs and outputs use the FBM subsystem power supply for field power.
- Group Isolated – Input channels are isolated as a group from earth (ground) and module logic circuitry. Group isolated inputs use the subsystem power supply for field circuit power. For certain FBMs with group isolation, specific TAs provide channel isolation to the FBMs' inputs.

Compact Fieldbus Modules

Each Compact FBM is configurable for operation with the applicable field sensors and/or actuators. This is accomplished by running appropriate application programs, and in conjunction with configurable program options. The Compact FBMs and their executable programs and software functions are identified in the table. Also listed are the Product Specification Sheets (PSSs) for the individual FBMs.

Table 1 - Compact 200 Series Fieldbus Modules

Compact Module	Function(s)	Application Program	Software Function(s)[a]	PSS
FBM201	8-Channel 0 to 20 mA Input, Channel Isolated	Analog Input	Conversion Time, Rate of Change Limits	PSS 41H-2C201
FBM202	8-Channel Thermocouple/ Millivolt Input, Channel Isolated	Analog Input	Conversion Time, Rate of Change Limits	PSS 41H-2C202
FBM203	8-Channel RTD Input (platinum or nickel), Channel Isolated, 2- or 3-wire RTD sensor input, 0 to 320 ohm	Analog Input	Conversion Time, Rate of Change Limits	PSS 41H-2C203
FBM203c	8-Channel RTD Input (copper), Channel Isolated, 2- or 3-wire RTD sensor input, 0 to 30 ohm	Analog Input	Conversion Time, Rate of Change Limits	PSS 41H-2C203
FBM203d	8-Channel RTD Input (platinum or nickel), Channel Isolated, 4-wire RTD sensor input, 0 to 320 ohm	Analog Input	Conversion Time, Rate of Change Limits	PSS 41H-2C203
FBM204	8-Channel 0 to 20 mA I/O (4 Input, 4 Output), Channel Isolated	Analog I/O or DPIDA	Conversion Time, Output Fail-Safe Configuration (Hold/Fall-back on a per channel basis)	PSS 41H-2C204
FBM207	Redundant Ready16-Channel dc Voltage Monitor, Channel Isolated	Discrete Input or Ladder Logic	Input Filter Time	PSS 41H-2C207
FBM207b	Redundant Ready16-Channel 24 V dc Contact Sense, Channel Isolated	Discrete Input or Ladder Logic	Input Filter Time	PSS 41H-2C207
FBM207c	Redundant Ready16-Channel 48 V dc Contact Sense, Channel Isolated	Discrete Input or Ladder Logic	Input Filter Time	PSS 41H-2C207
FBM208	Redundant with Readback, 0 to 20 mA Input/Output (4 Input and 4 Output), Channel Isolated	Analog I/O	Conversion Time, Output Fail-Safe Configuration (Fall-back to "0" on a per channel basis)	PSS 41H-2C208
FBM211	16-Channel Differential Analog Input,0 to 20 mA, Differential Isolated	Analog Input	Conversion Time, Rate of Change Limits	PSS 41H-2C211
FBM212	14-Channel Differential Analog Input, Thermocouple, Differential Isolated	Analog Input	Conversion Time, Rate of Change Limits	PSS 41H-2C212

Table 1 - Compact 200 Series Fieldbus Modules (Continued)

Compact Module	Function(s)	Application Program	Software Function(s)[a]	PSS
FBM214b	8-Channel 4 to 20 mA, HART® Input,Channel-Isolated	Analog Input and HART Input	Conversion Time, Rate of Change Limits	PSS 41H-2C214
FBM214e	16-Channel 4 to 20 mA, HART® Input, NAMUR NE43	Analog Input and HART Input	Conversion Time, Rate of Change Limits, NAMUR NE43 Range Detection	PSS 41H-2C214e
FBM215	8-Channel 4 to 20 mA, HART® Output,Channel-Isolated	Analog Output and HART Output	Output Fail-Safe Configuration (Hold/Fall-back on a per channel basis)	PSS 41H-2C215
FBM216b	Redundant 8-Channel 4 to 20 mA, HART® InputChannel-Isolated	Analog Input and HART Input	Conversion Time, Rate of Change Limits	PSS 41H-2C216
FBM217	Redundant Ready32-Channel Discrete Input, Group Isolated[b]	Discrete I/O, or Ladder Logic	Input Filter Time	PSS 41H-2C217
FBM218	Redundant 8-Channel 4 to 20 mA, HART® Output, Channel-Isolated	Analog Output and HART Output	Output Fail-Safe Configuration (Fail-Safe is configured on a per channel basis)	PSS 41H-2C218
FBM219	24-Channel Discrete Input, Plus 8-Channel Discrete Output, External Source, Group Isolated[c]	Discrete I/O or Ladder Logic	Input Filter Time, Fail-Safe Configuration, Fail-Safe Fall-back, and Sustained or Momentary Outputs. If the Momentary Output configuration is selected, then Pulse Output Interval is also configurable.	PSS 41H-2C219
FBM227	4-Channel 0 to 10 V dc Input,2-Channel 0 to 10 V dc Output4-Channel Discrete Input,4-Channel Discrete Output; Discrete channels are isolated in channel pairs	Analog I/O, Discrete I/O, (Both) MDACT or DPIDA Control Support	(Analog) Conversion Time, Output Fail-Safe Configuration, (Discrete) Input Filter Time	PSS 41H-2C227
FBM237	Redundant Ready8-Channel 0 to 20 mA Output, Redundant, Channel Isolated	Analog Output	Output Fail-Safe Configuration (When Non-Redundant, Hold/Fallback on a per channel basis; When Redundant, Fallback to "0" on a per channel basis)	PSS 41H-2C237
FBM238	24-Channel Discrete Input, Plus 8-Channel Discrete Output, External Source, Group Isolated	Discrete I/O or Ladder Logic	Input Filter Time	PSS 41H-2C238
FBM239	16-Channel Discrete Input, Plus 16-Channel Discrete Output, External Source, Group Isolated	Discrete I/O or Ladder Logic	Input Filter Time	PSS 41H-2C239
FBM240	Redundant Ready8-Channel Externally Sourced Discrete Output	Discrete Output	Output Fail-Safe Configuration (When	PSS 41H-2C240

Table 1 - Compact 200 Series Fieldbus Modules (Continued)

Compact Module	Function(s)	Application Program	Software Function(s)[a]	PSS
	with Readback, Channel Isolated		Redundant, Fallback to "0" on a per channel basis)	

Table 1 - Compact 200 Series Fieldbus Modules (Continued)

Compact Module	Function(s)	Application Program	Software Function(s)[a]	PSS
FBM241	8-Channel Voltage Monitor, Plus8-Channel Discrete Output, External Source, Channel Isolated	Discrete I/O or Ladder Logic	Input Filter Time, Fail-Safe Configuration, Fail-Safe Fall-back, and Sustained or Momentary Outputs. If the Momentary Output configuration is selected, then Pulse Output Interval is also configurable.	PSS 41H-2C241
FBM241c	8-Channel Contact Sense, Plus8-Channel Discrete Output, External Source, Channel Isolated	Discrete I/O or Ladder Logic	Input Filter Time, Fail-Safe Configuration, Fail-Safe Fall-back, and Sustained or Momentary Outputs. If the Momentary Output configuration is selected, then Pulse Output Interval is also configurable.	PSS 41H-2C241
FBM241d	8-Channel Contact Sense, Plus8-Channel Discrete Output, Internal Source, Channel Isolated	Discrete I/O or Ladder Logic	Input Filter Time, Fail-Safe Configuration, Fail-Safe Fall-back, and Sustained or Momentary Outputs. If the Momentary Output configuration is selected, then Pulse Output Interval is also configurable.	PSS 41H-2C241
FBM242	16-Channel Externally Sourced Discrete Output, Channel Isolated	Discrete Output or Ladder Logic	Fail-Safe Configuration	PSS 41H-2C242
FBM247	8-Channel Current/ Voltage Analog/Digital/ Pulse I/O Configurable Channel Interface Module (with HART® Support on All Channels) - Includes support for additional communication types	Analog I/O and Discrete I/O	Discrete Input, Pulse Count, Sequence of Events and Transient Data Recording with support for Sustained and Momentary Digital Outputs	PSS 41H-2C247
FBM248	8-Channel Current/ Voltage Analog/Digital/ Pulse I/O Configurable Channel Interface Module (with HART® Support on All Channels), Redundant - Includes support for additional communication types	Analog I/O and Discrete I/O	Discrete Input, Pulse Count, Sequence of Events and Transient Data Recording with support for Sustained and Momentary Digital Outputs	PSS 41H-2C248

(a) Software functions for inputs are exercised on a per module basis; those for outputs are exercised on a per channel basis.

(b) The Termination Assembly for this FBM provides channel isolation for the FBM's inputs as well. Details are provided in the FBM's PSS.

(c) The Termination Assemblies for this FBM provides channel isolation for either the FBM's inputs or outputs as well. Details are provided in the FBM's PSS.

Fieldbus Communications Modules

Fieldbus Communications Modules used in conjunction with the FBMs are listed in Table 2.

Redundant Fieldbus Modules

Redundant fieldbus modules, such as the Compact FBM216b, must be installed in pairs along with a redundancy adapter. Two single modules are combined at the associated baseplate with the field signals wired to one common termination assembly. Compact FBM216b and FBM218 use RIN and ROUT blocks to interface to their inputs and outputs.

Only the Master Compact FBM writes to the outputs among redundant HART output modules. The Tracker Compact FBM is 1 mA below the Master by default.

Redundant Ready Compact Fieldbus Modules

Redundant ready Compact FBMs, such as the Compact FBM207b, may be used in either non-redundant mode by installing a single module, or in redundant mode by installing two modules along with a redundancy adapter. Some modules, such as the FBM248, only support configuration in redundant mode. See the PSSs listed in Table 1 for more information about each module. In either configuration, the modules are identical.

In the redundant configuration, two single modules are combined at the associated baseplate, with the field output signals wired to one common termination assembly. The input current for redundant modules is doubled. A redundant digital input block in the Foxboro DCS software validates each input in conjunction with information to/from the module, and selects the input with the highest quality for processing in the control strategy.

Calibration

The analog FBMs are calibrated at the factory prior to shipment and cannot be calibrated in the field. In addition, discrete input/output FBMs do not need field adjustments. Therefore, the FBMs do not contain local (that is, module-mounted) manual controls or jumpers.

Table 2 - Fieldbus Communications Modules

Module Type	Function	PSS
FCM2F	Available in three models: FCM2F2, FCM2F4, and FCM2F10 (for 2, 4, and 10 km cabling, respectively). Used to extend the Module Fieldbus, allowing greater distance between 200 Series baseplates (used in pairs for redundancy).	PSS 41H-2FCM

Functional Specifications

Software Requirements	I/A Series software v8.8 or Foxboro DCS Control Core Services v9.0 or higher
Compatible Foxboro Control Processor	Control Processor FCP280, FCP270, or ZCP270
Equipment Quantities	• FBMs Hosted by FCP280[(a)]: ◦ 100 Series FBMs - up to 64 ◦ 200 Series FBMs - up to 128 200 Series FBMs, or up to 128 of a combination of 100 Series and 200 Series FBMs (with no more than 64 100 Series FBMs in this configuration) • FBMs Hosted by FCP270[(b)]: ◦ 100 Series FBMs - up to 64 ◦ 200 Series FBMs - up to 32 (without FEM100) or up to 128 (with FEM100) • FBMs Hosted by ZCP270[(c)]: ◦ Up to 128 100 Series or 200 Series FBMs per ZCP270 with FCM100E (dependent upon the number of FCM100Es implemented) • FCM100Et Pairs Per ZCP270: ◦ Up to 32 • FBMs Hosted by FCM100Et[(c)]: ◦ Up to 32 • FBMs Hosted by FCM100E[(c)]: ◦ 100 Series FBMs - up to 64 ◦ 200 Series FBMs - up to 32

(a) Depending on control processor sizing constraints. [See *Field Control Processor 280 (FCP280) Sizing Guidelines and Excel Workbook* (B0700FY)]

(b) Depending on control processor sizing constraints [See *Field Control Processor 270 (FCP270) Sizing Guidelines and Excel Workbook* (B0700AV)]

(c) Depending on control processor sizing constraints [See *Z-Module Control Processor 270 (ZCP270) Sizing Guidelines and Excel Workbook* (B0700AW)]

Related Product Documents

Document Number	Description
PSS 41H-2CERTS	Standard and Compact 200 Series I/O — Agency Certifications
PSS 41H-2MARCERT	Standard and Compact 200 Series I/O — Marine Certifications
PSS 41H-2W12 B3	DIN Rail Mounted High Density I/O Equipment, Agency Certifications
PSS 41H-2C200	Compact 200 Series 16-Slot Horizontal Baseplate
PSS 41H-2SBASPLT	Standard 200 Series Baseplates
PSS 41H-2GOV	G-Series Enclosures Overview
PSS 41H-2FBI200	FBI200 Fieldbus Isolator/Filter
PSS 41H-1FCP280	Field Control Processor 280 (FCP280)
PSS 41H-2C201	Compact FBM201 Analog Input 0 to 20 mA Module
PSS 41H-2C202	Compact FBM202, Thermocouple/mV Input Module
PSS 41H-2C203	Compact FBM203/c/d Platinum/Nickel/Copper RTD Input Module
PSS 41H-2C204	Compact FBM204, 0 to 20 mA I/O Module
PSS 41H-2C207	Compact FBM207/b/c Voltage Monitor/Contact Sense Input Interface Modules
PSS 41H-2C208	Compact FBM208, Redundant with Readback, 0 to 20 mA I/O Module
PSS 41H-2C211	Compact FBM211, 0 to 20 mA Input Module
PSS 41H-2C212	Compact FBM212 Thermocouple/mV Differential Input Module
PSS 41H-2C214	Compact FBM214b, HART® Communication Input Interface Module
PSS 41H-2C215	Compact FBM215 HART® Communication Output Interface Module
PSS 41H-2C216	Compact FBM216b, HART® Communication Redundant Input Interface Module
PSS 41H-2C217	Compact FBM217 Discrete Input Interface Module
PSS 41H-2C218	Compact FBM218 HART® Communication Redundant Output Interface Module
PSS 41H-2C219	Compact FBM219 Discrete I/O Interface Module
PSS 41H-2C227	Compact FBM227, 0 to 10 V dc, Contact/dc I/O Module with DPIDA and MDACT Support
PSS 41H-2C237	Compact FBM237, 0 to 20 mA Output Module (Redundant Ready)
PSS 41H-2C238	Compact FBM238, Digital 24DI/8DO Module
PSS 41H-2C239	Compact FBM239, Digital 16DI/16DO Module
PSS 41H-2C240	Compact FBM240 Redundant with Readback, Discrete Output Module
PSS 41H-2C241	Compact FBM241/c/d Discrete I/O Modules
PSS 41H-2C242	Compact FBM242, Externally Sourced, Discrete Output Interface Module
PSS 41H-2C247	Compact FBM247, Current/Voltage Analog/Digital/Pulse I/O Configurable Module
PSS 41H-2C248	Compact FBM248, Current/Voltage Analog/Digital/Pulse I/O Configurable Module, Redundant
PSS 41H-2FCM	Fieldbus Communications Module, FCM2F2/FCM2F4/FCM2F10
B0700FY	Field Control Processor 280 (FCP280) Sizing Guidelines and Excel Workbook

Document Number	Description
B0400FA	Standard and Compact 200 Series Subsystem User's Guide
Other Related Product Specification Sheets - for Compact 200 Series I/O Equipment	
PSS 41H-2C480 B4	Compact Power Supply - FPS480-24
PSS 41H-2G13	G13 System Enclosure
PSS 41H-2G14	G14 System and Termination Enclosure
PSS 31H-2K13	K13 System Enclosure
PSS 31H-2K14	K14 System and Termination Enclosure
Other Related Product Specification Sheets - for Standard 200 Series I/O Equipment	
PSS 41H-2SOV	Standard 200 Series Subsystem Overview
PSS 41H-2W100	100 Series Fieldbus Module Upgrade Subsystem Overview
PSS 41H-2FPS400	Standard 200 Series Power Supply
PSS 41H-2FPS	200 Series Power Supplies - FPS240-24 and FPS120-24

Proposition 65

WARNING: This product can expose you to chemicals including lead and lead compounds, which are known to the State of California to cause cancer and birth defects or other reproductive harm. For more information go to www.P65Warnings.ca.gov.

Schneider Electric Systems USA, Inc.
70 Mechanic Street
Foxboro, Massachusetts 02035-2040
United States of America

Global Customer Support: https://pasupport.se.com

As standards, specifications, and design change from time to time, please ask for confirmation of the information given in this publication.

© 2014–2025 Schneider Electric. All rights reserved.

PSS 41H-2COV, Rev C