Foxboro™ DCS

Compact FBM240, Redundant with Readback, Discrete Output and Discrete Input Module

PSS 41H-2C240

Product Specification

May 2025



https://www.se.com

Legal Information

The information provided in this document contains general descriptions, technical characteristics and/or recommendations related to products/solutions.

This document is not intended as a substitute for a detailed study or operational and site-specific development or schematic plan. It is not to be used for determining suitability or reliability of the products/solutions for specific user applications. It is the duty of any such user to perform or have any professional expert of its choice (integrator, specifier or the like) perform the appropriate and comprehensive risk analysis, evaluation and testing of the products/solutions with respect to the relevant specific application or use thereof.

The Schneider Electric brand and any trademarks of Schneider Electric SE and its subsidiaries referred to in this document are the property of Schneider Electric SE or its subsidiaries. All other brands may be trademarks of their respective owner.

This document and its content are protected under applicable copyright laws and provided for informative use only. No part of this document may be reproduced or transmitted in any form or by any means (electronic, mechanical, photocopying, recording, or otherwise), for any purpose, without the prior written permission of Schneider Electric.

Schneider Electric does not grant any right or license for commercial use of the document or its content, except for a non-exclusive and personal license to consult it on an "as is" basis.

Schneider Electric reserves the right to make changes or updates with respect to or in the content of this document or the format thereof, at any time without notice.

To the extent permitted by applicable law, no responsibility or liability is assumed by Schneider Electric and its subsidiaries for any errors or omissions in the informational content of this document, as well as any non-intended use or misuse of the content thereof.

Overview

The Compact FBM240 is an 8 channel input and 8 channel output Foxboro™ DCS Fieldbus Module (FBM) available as a single or redundant module. A redundant pair of the modules combine to provide redundancy at the FBM level, with field I/O wired to one common termination assembly (see Figure 1). Each module independently holds the output(s) at its specified output value(s), and each independently reads back its observed value of the output.

This module is part of the Compact 200 Series I/O subsystem described in *Compact 200 Series I/O Subsystem Overview* (PSS 41H-2COV).

A redundant contact output block in the control software validates each output in conjunction with information to/from the module.

Figure 1 - Compact FBM240 Redundant Module Configuration

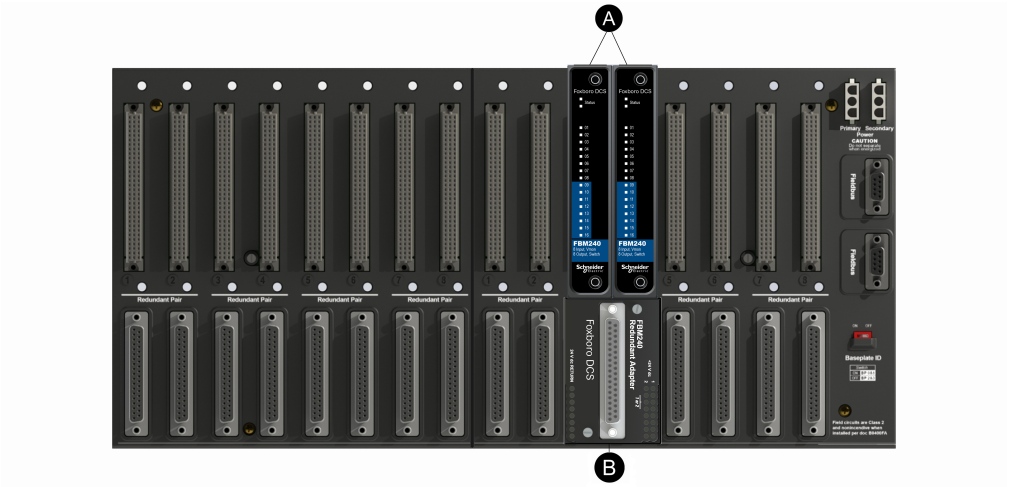

Legend	
A	Redundant Compact FBM240 Fieldbus Modules
B	Compact FBM240 Redundant Adapter (RH101DK)

Features

- Eight discrete outputs/Eight discrete voltage monitor inputs
- Eight discrete inputs read back the voltage across the relay contacts. Sets the channel BAD if the state of the contact disagrees with the state of the corresponding output channel
- Monitors each FBM output and sets the output channel BAD if the output is in the wrong state
- Single or redundant module
- Termination Assemblies (TAs) for locally or remotely connecting field wiring to the Compact FBM240
- Supports discrete relay outputs capable of switching:
  - 10 A at 80 to 120 VAC, or
  - 5 A at 80 to 125 VDC, or
  - 5 A at 15 to 30 VDC, or
  - 5 A at 80 to 120 VAC
- Supports channel-isolated discrete I/O:
  - 15-60 VDC @ 2 A, fused outputs
  - 15-60 VDC inputs

    NOTE: Support for this termination assembly and the new Fail-Safe configuration options described in Fail-Safe, page 6 require version 1.40N or later firmware.
- Redundant operation failure detection
  - Output contact monitor readback and high coverage of internal FBM detected failures allows redundant partner to automatically continue to drive discrete outputs and to monitor inputs
- Internal per channel output demand state failure detection
  - Output Channel is marked BAD in both Single and Redundant Operation if the demand state read-back indicates a state of miss-compare

Internal Readback of Output

The Compact FBM240 has 8 internal readback channels, one per each output channel, used to verify that the output has changed to the requested state. These channels read the voltage across the relay contacts on the relay termination assemblies. The states of these channels are displayed on LEDs on the front panel of the Compact FBM240. When external power is applied to the relay contact of each channel, the LED for that channel is ON when the relay contact is CLOSED, and OFF when the relay contact is OPEN. If the state of the contact disagrees with the state of the corresponding output channel, the channel is marked BAD.

The FBM also monitors each of its eight outputs and sets the corresponding output channel BAD if the output is in the wrong state.

If the channel or input power is marked BAD, the CP presents that information to the Foxboro DCS for display as a System Management alarm and as a control block alarm.

The relay termination assemblies (TAs) are available with a 5 A or a 10 A relay per channel and support these discrete outputs:

FBM	Contact Readback	Outputs
Compact FBM240 with 10 A relay	120 VAC, or 125 VDC (external power source)	120 VAC at 10 A, or 125 VDC at 5 A Switch (external power source)
Compact FBM240 with 5 A relay	120 VAC (external power source)	120 VAC at 5 A Switch (external power source)
Compact FBM240 with 5 A relay	30 VDC (external power source)	30 VDC at 5 A Switch (external power source)

Each discrete output is galvanically isolated from other channels and ground.

When used with the RH916AQ/RH916AR termination assembly, each of the I/O channels is galvanically isolated from all other channels and ground and the outputs are fused to help protect them from overload. Configuration options allow the inputs to be used independently of the outputs with this termination assembly. The eight voltage monitor inputs and switch outputs operate at 15 to 60 VDC.

Figure 2 - FBM240 with Relay Output TA Showing Internal Readback and Output Contact State Readback

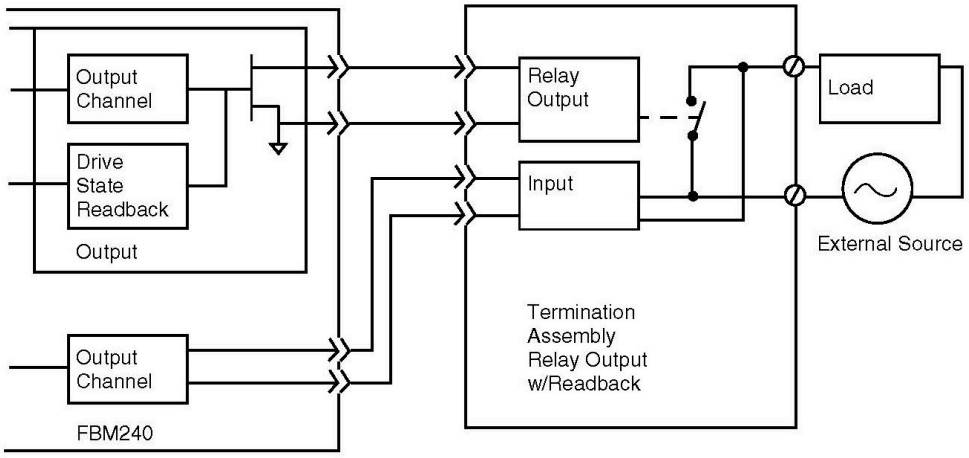

Redundant Outputs

A redundant contact output function block, COUTR, is used for each redundant pair of outputs. The COUTR block handles output writes and initialization logic for the redundant channels. On each write of the COUTR block, identical output writes are sent to both modules, fully exercising the Fieldbus and the logic circuitry of each module. You can select a sustained output that follows the block input or a pulsed output with a selectable pulse width.

When a failure is detected in one of the modules, its output is marked BAD and the corresponding channel in the good module automatically continues to drive the discrete outputs.

Each output channel drives an externally powered load. Power for each Compact FBM240 module is diode OR'd together in the redundant adapter to help assure redundant power. The microprocessor of each module executes the digital output application program, plus diagnostic routines that validate the health of the FBM.

Fail-Safe

Configurable options for output safety include:

- Digital Output Fail-Safe Fallback Data - specifies the channel fallback value (0 or 1) for each of the eight digital outputs
- Mask option - determines which of the eight digital outputs hold its current value and which outputs assume the fallback values
- Fieldbus Fail-Safe Delay Time - length of time the FBM waits for a communication from the CP before entering a communications fail

Redundant Modules

For redundant modules, the Fail-Safe Fallback Data and mask options are configurable. An additional option is provided so that the module data will fall back to zero (0) when the module is put off-line for maintenance functions so that it will not interfere with the remaining module which is still on-line.

The Compact FBM240 requires version 1.40N or later firmware to support this feature.

Single Modules

For single modules, the Fail-Safe Fallback Data and Mask options are configurable.

Compact Design

The Compact FBM240’s design is narrower than the standard 200 Series FBMs. It has a rugged Acrylonitrile Butadiene Styrene (ABS) exterior for physical protection of the circuits. Enclosures specially designed for mounting the FBMs provide various levels of environmental protection, up to G3 harsh environments, per ISA Standard S71.04.

High Reliability

The redundancy of the module pair, coupled with the high coverage of detected faults, provides a very high subsystem availability time.

The module performs signal conversion required to interface electrical input signals from field sensors to the optionally redundant Fieldbus. It executes the Discrete I/O program with the following configurable options: Input Filter Time, Fail-Safe Configuration, and Sustained or Momentary Outputs. If the Momentary Output configuration is selected, then Pulse Output Interval is also configurable.

When redundant, either module may be replaced without upsetting field input or output signals to the good module. The module can be removed/replaced without removing field device termination cabling, power, or communications cabling.

Easy Removal/Replacement

The module mounts on a Compact 200 Series baseplate. Two screws on the FBM help secure the module to the baseplate.

Redundant modules must be located in adjacent positions on the baseplate, with the first module located in an odd-numbered position (for example, the positions labelled “3” and “4”). To achieve redundancy, a redundant adapter module is placed on the two adjacent baseplate termination cable connectors to provide termination for a single cable (see Figure 1). A single termination cable connects from the redundant adapter to the associated termination assembly (TA).

When redundant, either module may be replaced without upsetting field input signals to the good module. Each module can be removed/replaced without removing field termination cabling, power, or communications cabling.

Modular Baseplate Mounting

The Compact FBM240 module mounts on a DIN rail mounted Modular Baseplate, which accommodates up to four or eight FBMs. The Modular Baseplate is either DIN rail mounted or rack mounted, and includes signal connectors for the redundant Module Fieldbus, redundant independent DC power, and termination cables.

Redundant modules must be located in odd and even adjacent positions on the baseplate (positions 1 and 2, 3 and 4, 5 and 6, or 7 and 8). To achieve the redundancy, a redundant adapter module is placed on the two adjacent baseplate termination cable connectors to provide a single termination cable connection (See Figure 1, page 3).

To system configurator applications and to other systems monitoring through SMON, Foxboro DCS System Manager, and SMDH, redundant FBM240s appear to be separate, nonredundant modules. The functional redundancy for these modules is provided by their associated control blocks.

Redundant Modules in Foxboro DCS HMI

The redundant pair of modules appear as two independent modules to system management software applications (such as Foxboro DCS System Manager and System Manager/Display Handler (SMDH)). The functional redundancy for these modules is provided by their associated control blocks.

Fieldbus Communication

The Fieldbus Communications Module (FCM) or the Field Control Processor (FCP) interfaces to the redundant 2 Mbps module Fieldbus used by the FBMs. The Compact FBM240 accepts communication from either path of the redundant 2 Mbps Fieldbus. If one path is unsuccessful or is switched at the system level, the module continues communication over the active path.

Termination Assemblies

Field I/O signals connect to the FBM subsystem via DIN rail mounted termination assemblies (TAs). The TAs used with the Compact FBM240 provide:

- Output signal connection points
- External power connection point
- 5 A unsealed relay or a 10 A unsealed relay for each output
- 15-60 VDC switch and voltage monitor inputs

The relay TAs have a high voltage input circuit that monitors the voltage across the contacts of each output relay. Monitor circuits are located on daughter card assemblies mounted on the TAs. There are two daughter cards per TA, each with four monitor circuits. The TAs are:

- RH917YF - 80 to 125 VDC at 5 A or 80 to 120 VAC at 10 A
- RH917HU - 80 to 120 VAC at 5 A
- RH926SZ - 15 to 30 VDC at 5 A
- RH916AQ/RH916AR - 15 to 60 VDC voltage monitor and 2 A switch

  NOTE: When the Compact FBM240 output opens, the TA contacts still apply current to the circuit due to the TA's readback circuitry, as described in Table 2 and Table 3.

The RH916AQ/AR passive TA provides fused 2 A outputs and independent inputs for use with 15-60 VDC.

The redundant adapter connects the redundant FBM's baseplate connectors together. The redundant adapter provides a single termination connection to a single TA.

The DIN rail mounted termination assemblies connect to the redundant adapter by means of a removable termination cable. The cable is available in a variety of lengths, up to 30 meters (98 feet), allowing the termination assemblies to be mounted as needed by plant design.

Visual Indicators

Red and green light-emitting diodes (LEDs) incorporated into the front of the modules provide visual status indications of FBM functions, as well as the discrete states of the individual output points.

Functional Specifications

I/O Channels	Eight input and eight output channels. Each channel is isolated and independent from the other channels.
Filter/Debounce Time[a]	Configurable (No Filtering, 4, 8, 16, or 32 ms)
Voltage Monitor Function (with TA (RH916AQ/ RH916AR))	• Input: ◦ On-State Voltage: 15 to 60 VDC ◦ Off-State Voltage: 0 to 5 VDC ◦ Current: (Single module) 1.4 mA (typical) at 5 to 60 VDC (Redundant modules) 2.8 mA (typical) at 5 to 60 VDC • Source Resistance Limits: ◦ On-State: 1 kΩ (maximum) at 15 VDC ◦ Off-State: 100 kΩ (minimum) at 60 VDC
Output Switch with External Source	• Applied Voltage: 60 VDC (maximum) • Load Current: 2.0 A (maximum) • Off-State Leakage Current: 0.1 mA (maximum)
Inductive Loads	TA output may require a protective diode or metal oxide varistor (MOV) connected across the inductive load.
I/O Channel Isolation	Each channel is galvanically isolated from all other channels and earth (ground). The TA/module withstands, without damage, a potential of 600 VAC applied for one minute between any channel and ground, or between a given channel and any other channel. When used with a relay TA, the input and output channels are not isolated from each other, but are isolated as an I/O pair. **⚠⚠DANGER** **HAZARD OF ELECTRIC SHOCK, EXPLOSION, OR ARC FLASH** Although the module can withstand a maximum of 600 VAC applied for one minute between any channel, DO NOT apply voltages beyond the published input ranges. The channels are NOT intended for permanent connection to hazardous voltage circuits. Understand that connection of these channels to voltages greater than 30 VAC or 60 VDC violates electrical safety code requirements and may expose users to electric shock. **Failure to follow these instructions will result in death or serious injury.**
Power Requirements	• Input Voltage Range (Redundant): 24 VDC +5%, -10%

- Consumption (Maximum):
  - Module with TA RH916AR:
    2 W (maximum) total for single module
    4 W (maximum) total for redundant pair
  - Module with TA RH926SZ:
    7.6 W (maximum) total for single module
  - Module with TA RH917YF:
    15.2 W (maximum) total for single module
  - Termination Assembly:
    5 A relay (RH917HU or RH926SZ) - 7.6 W
    10 A relay (RH917YF) - 15.2 W
- Heat Dissipation (Maximum):
  - Module with TA RH916AR:
    2 W (maximum) total for single module
    4 W (maximum) total for redundant pair
  - Module with TA RH926SZ:
    7.6 W (maximum) total for single module
  - Module with TA RH917YF:
    15.2 W (maximum) total for single module
  - Termination Assembly:
    5 A relay (RH917HU or RH926SZ) - 7.6 W
    10 A relay (RH917YF) - 15.2 W
- 8-Channel Relay Output Terminations Functional Specifications:
  - RH917YF: 8 Channel Single Pole/Single Throw relay output:
    - TA Contact rating:
      80 to 125 VDC @ 5 A
      80 to 120 VAC @ 10 A
    - Open contact leakage current:
      2.5 mA typical @ 50 to 120 VAC or 50 to 125 VDC
    - Open contact Output read-back threshold:
      55 VAC or DC
  - RH917HU: 8 Channel Single Pole/Single Throw relay output:
    - TA Contact rating:
      80 to 120 VAC @ 5 A
    - Open contact leakage current:
      2.5 mA typical @ 50 to 120 VAC
    - Open contact Output readback threshold:
      55 VAC or DC

<table>
<tr><td></td><td colspan="4"></td></tr>
<tr><td>Power Requirements</td><td colspan="4">

RH926SZ: 8 Channel Single Pole/Single Throw relay output:

TA Contact rating:
15 to 30 VDC @ 5 A
Open contact leakage current:
4.5 mA typical @ 30 VDC
Open contact Output read-back threshold
5 VDC @ 1 mA

⚠⚠DANGER
HAZARD OF ELECTRIC SHOCK, EXPLOSION, OR ARC FLASH
The specified contact rating is de-rated from the relay vendor specifications listed in Table 2 and Table 3. Contacts must not be used beyond the de-rated specifications listed above.
Failure to follow these instructions will result in death or serious injury.
⚠⚠DANGER
HAZARD OF ELECTRIC SHOCK, EXPLOSION, OR ARC FLASH
The open contact leakage current is required to provide the contact output state read-back signal and must be taken into account when outputs are used to drive loads that may remain in the activated state at low current levels. Loads such as small relays, solenoids or Motor Operated Valves may require lower current levels to help guarantee deactivation and as such should not be considered as loads for these TAs.
Failure to follow these instructions will result in death or serious injury.
</td></tr>
<tr><td>Calibration Requirements</td><td colspan="4">Calibration of the module and termination assembly is not required.</td></tr>
<tr><td>Regulatory Compliance: Electromagnetic Compatibility (EMC):</td><td colspan="4">

European EMC Directive 2004/108/EC (Prior to April 20, 2016) and 2014/30/EU (Beginning April 20, 2016):
Meets: EN61326-1:2013 Class A Emissions and Industrial Immunity Levels

</td></tr>
</table>

Regulatory Compliance: Product Safety	• *Underwriters Laboratories (UL) for U.S. and Canada*: UL/UL-C listed as suitable for use in UL/UL-C listed Class I, Groups A-D; Division 2; temperature code T4 enclosure based systems when connected to specified Foxboro DCS processor modules. Communications circuits also meet the requirements for Class 2 as defined in Article 725 of the National Electrical Code (NFPA No.70) and Section 16 of the Canadian Electrical Code (CSA C22.1). For more information, see *Standard and Compact 200 Series Subsystem User's Guide* (B0400FA). • *European Low Voltage Directive 2006/95/EC (Prior to April 20, 2016) and 2014/35/EU (Beginning April 20, 2016) and Explosive Atmospheres (ATEX) directive 94/9/EC (Prior to April 20, 2016) and 2014/34/EU (Beginning April 20, 2016)* DEMKO certified as Ex nA IIC T4 for use in certified Zone 2 enclosure when connected to specified processor modules as described in the *Standard and Compact 200 Series Subsystem User's Guide* (B0400FA). Termination Assembly: • *Underwriters Laboratories (UL) for U.S. and Canada*: UL/UL-C listed as suitable for use in UL/UL-C listed Class I, Groups A-D; Division 2; temperature code T4 enclosure based systems when connected to specified Foxboro DCS processor modules as described in the *Standard and Compact 200 Series Subsystem User's Guide* (B0400FA). • *European Low Voltage Directive 2006/95/EC (Prior to April 20, 2016) and 2014/35/EU (Beginning April 20, 2016) and Explosive Atmospheres (ATEX) directive 94/9/EC (Prior to April 20, 2016) and 2014/34/EU (Beginning April 20, 2016)*: DEMKO certified as Ex nA IIC T4 for use in certified Zone 2 enclosure when connected to specified processor modules as described in the *Standard and Compact 200 Series Subsystem User's Guide* (B0400FA)
RoHS Compliance	Complies with European RoHS Directive 2011/65/EU, including amending Directives 2015/863 and 2017/2102.
IECEx Certification	IECEx Certified
[a] Digital filtering available for 200 Series FBM or competitive migration modules with version 1.25H or later firmware.	

Environmental Specifications

	Operating	Storage
Temperature	• Compact FBM240: -20 to +60°C (-4 to +140°F) • Termination Assembly: -20 to +70°C (-4 to +158°F)	-40 to +70°C (-40 to +158°F)
Relative Humidity	5 to 95% (noncondensing)	5 to 95% (noncondensing)
Altitude	-300 to +3,000 m (-1,000 to +10,000 ft)	-300 to +12,000 m (-1,000 to +40,000 ft)
Vibration	0.75g (5 to 500 Hz)	
Contamination	Suitable for use in Class G3 (Harsh) environments as defined in ISA Standard S71.04, based on exposure testing according to EIA Standard 364-65, Class III.	

NOTE: The environmental limits of this module may be enhanced by the type of enclosure containing the module. See the applicable Product Specification Sheet (PSS) that describes the type of enclosure to be used.

Physical Specifications

Mounting	• Module: The Compact FBM240 mounts on a Compact 200 Series 16-slot horizontal baseplate. The baseplate can be mounted on a horizontal DIN rail, or horizontally on a 19-inch rack using a mounting kit. Redundant modules must be located in odd and even adjacent positions on the baseplate (positions 1 and 2, 3 and 4, 5 and 6, 7 and 8, 9 and 10 (the second 1 and 2), 11 and 12 (the second 3 and 4), 13 and 14 (the second 5 and 6), or 15 and 16 (the second 7 and 8)). See *Compact 200 Series 16-Slot Horizontal Baseplate* (PSS 41H-2C200) for details. • Termination Assembly: The TA mounts on a DIN rail and accommodates multiple DIN styles including 32 mm (1.26 in) and 35 mm (1.38 in).
Weight	• Compact FBM240: ◦ 185 g (6.5 oz) approximate • Termination Assemblies: ◦ 5 A- 454 g (1 lb) approximate ◦ 10 A - 908 g (2 lb) approximate ◦ 2 A - 363 g (0.8 lb) approximate
Dimensions - Module	• Height: 130 mm (5.12 in) • Width: 25 mm (0.98 in) • Depth: 150 mm (5.9 in) - Including baseplate connectors, 139 mm (5.46 in)
Dimensions - Termination Assemblies	See Dimensions - Nominal, page 18
Part Numbers	• Compact FBM240: RH101DG • Termination Assemblies (External Sourced) with Readback: ◦ RH917YF - 80 to 125 VDC at 5 A or 80 to 120 VAC at 10 A ◦ RH917HU - 80 to 120 VAC at 5 A ◦ RH926SZ - 15 to 30 VDC at 5 A • Termination Assembly (Passive): ◦ RH916AQ/RH916AR - 15 to 60 VDC at 2 A • Redundant Adapter: ◦ RH101DK

Termination Cables	• Cable Lengths: Up to 30 m (98 ft) • Cable Materials: Polyurethane or Low Smoke Zero Halogen (LSZH) • Termination Cable Type: Type 4 - See Table 1, page 16 • Cable Connection: ◦ FBM Baseplate End: 37-pin D-subminiature ◦ Termination Assembly End: 37-pin D-subminiature
Termination Assembly Construction	• Material: Polyamide Material, compression • Terminal Blocks: Outputs - 2 tiers, 8 positions I/O - 2 tiers, 16 positions • Ring Lug — Accepted Wiring Sizes: #6 size connectors (0.375 in (9.5 mm)) 0.5 to 4 mm^2/22 AWG to 12 AWG
Termination Assembly Switching Relays	• Electrical Service Life: 100,000 operations at rated resistive load 5,000,000 operations at no load • 5 A Relay: ◦ Type: Single-Pole, Single-Throw, Normally Open (SPST_NO) ◦ Switching Current: 5 A at 30 VDC, 5 A at 80 to 120 VAC (see Table 2, page 16) • 10 A Relay: ◦ Type: Single-Pole, Single-Throw, Normally Open (SPST_NO) ◦ Switching Current: 5 A at 80 to 125 VDC, or 10 A at 80 to 120 VAC (see Table 3, page 17)

Table 1 - Cable Types and Part Numbers

Cable Length m (ft)	Type 4 P/PVC[a]	LSZH[b]
0.5 (1.6)	RH100CJ	RH100BN
1.0 (3.2)	RH100CK	RH100BP
1.5 (4.9)	RH100EQ	RH100EN
2.0 (6.6)	RH100CL	RH100BQ
3.0 (9.8)	RH100CM	RH100BR
5.0 (16.4)	RH100CN	RH100BS
10.0 (32.8)	RH100CP	RH100BT
15.0 (49.2)	RH100CQ	RH100BU
20.0 (65.6)	RH100CR	RH100BV
25.0 (82.0)	RH100CS	RH100BW
30.0 (98.4)	RH100CT	RH100BX

(a) P/PVC is polyurethane outer jacket and semi-rigid PVC primary conductor insulation. PVC is rated from -20 to +80°C (-4 to 176°F).

(b) Low smoke zero halogen or low smoke free of halogen (LSZH) is a material classification used for cable jacketing. LSZH is composed of thermoplastic or thermoset compounds that emit limited smoke and no halogen when exposed to high sources of heat. Temperature range; -40 to +105°C (-40 to +221°F).

Table 2 - Termination Assembly Relay (P0165CL) 5 A Contact Data

Load	Single Pole Type	
	Resistive Load (p.f. = 1)	Inductive Load (p.f. = 0.4) (L/R = 7 ms)
Rated load	5 A at 250 VAC 0.6 A at 125 VDC	2 A at 250 VAC 0.4 A at 125 VDC
Contact material	0.187 silver cadmium oxide, gold flashed	
Carry current	5 A @ 250 VAC (see Note); 5 A @ 30 VDC	
Maximum operating voltage	380 VAC, 125 VDC	
Maximum operating current	5 A (see Note)	
Maximum switching capacity	1250 VA, 150 W	500 VA, 90 W
Minimum permissible load	100 mA, 5 VDC	

NOTE: These specifications apply only to the relay. When used in the TA, they have been derated due to UL and temperature ratings.

Table 3 - Termination Assembly Relay (P0165CP) 10 A Contact Data

Load	Single Pole Type	
	Resistive Load (p.f. = 1)	**Inductive Load (p.f. = 0.4) (L/R = 7 ms)**
Rated load	10 A at 250 VAC 13 A, 1/3 HP at 120 VAC 13 A, ½ HP at 277 VAC 10 A at 150 VDC	7.5 A at 120 VAC 4 A at 125 VDC
Contact material	0.187 silver cadmium oxide, gold flashed	
Carry current	13 A @ 250 VAC (see Note); 10 A @150 VDC	
Maximum operating voltage	240 VAC, 150 VDC	
Maximum operating current	13 A (see Note)	
Maximum switching capacity	3250 VA, 364 W	2400 VA, 500 W
Minimum permissible load	130 mA, 5 VDC	
NOTE: These specifications apply only to the relay. When used in the TA, they have been derated due to UL and temperature ratings		

Dimensions - Nominal

mm
in

Compression Termination Assembly, 2 A Fused Switch

RH916AQ

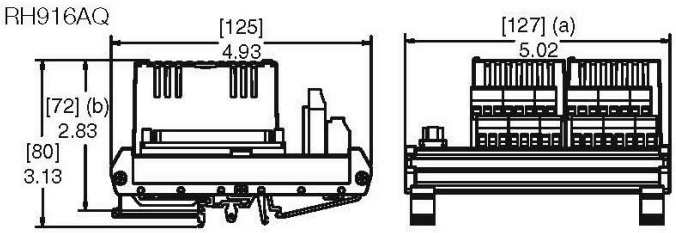

(a) Overall width – for determining DIN rail loading.
(b) Height above DIN rail (add to DIN rail height for total).

mm
in

Ring-Lug Termination Assembly, 5 A Relays

RH917HU, RH926SZ

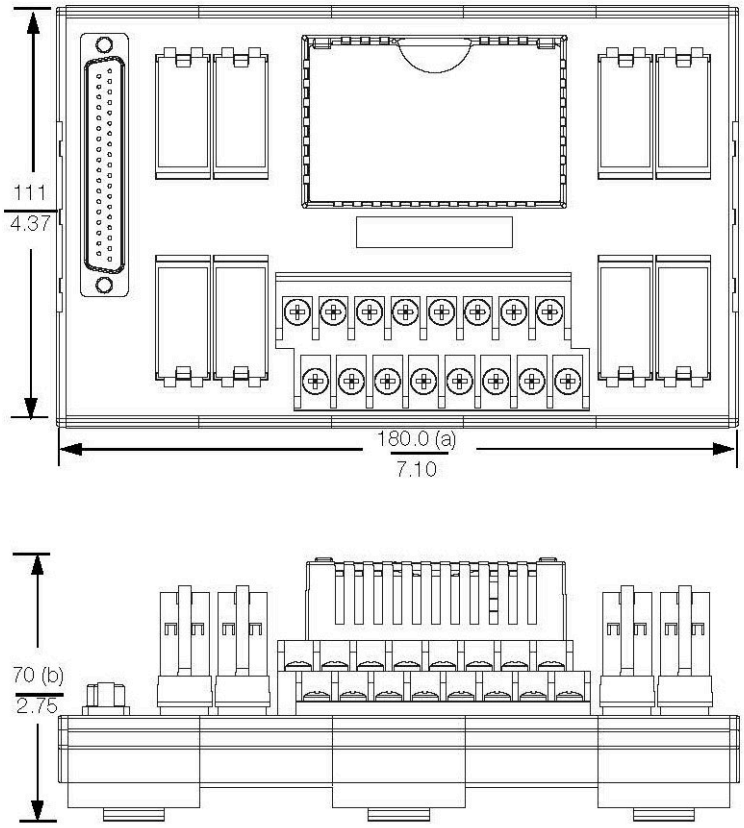

(a) Overall width – for determining DIN rail loading.
(b) Height above DIN rail (add to DIN rail height for total).

Ring Lug Termination Assembly, 10 A Relays

RH917YF

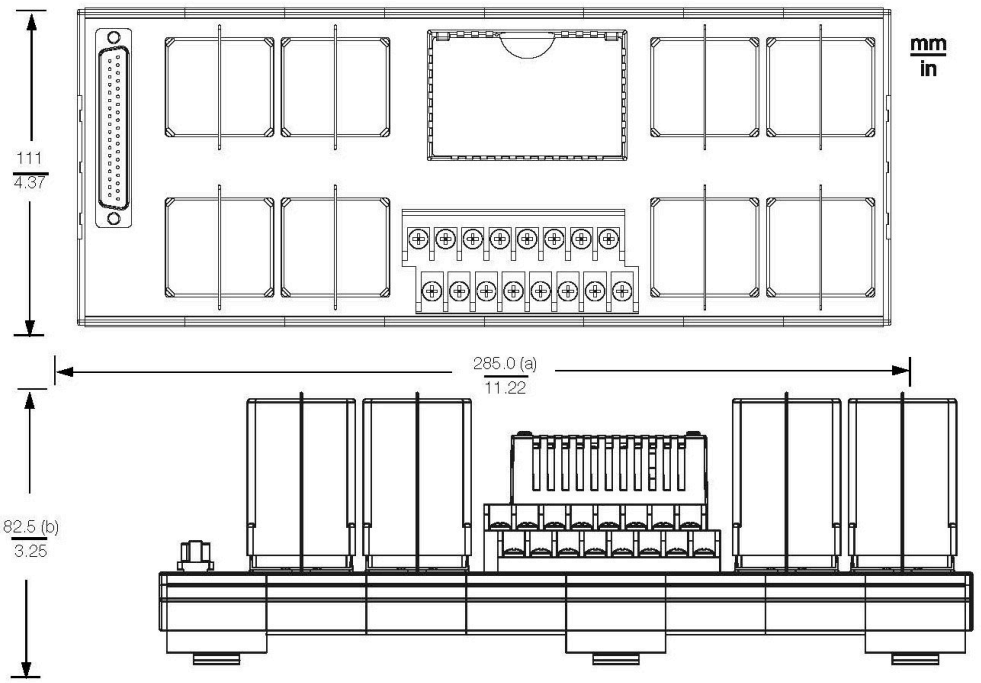

(a) Overall width – for determining DIN rail loading.
(b) Height above DIN rail (add to DIN rail height for total).

Ring Lug Termination Assembly, 2 A Fused Switch

RH916AR

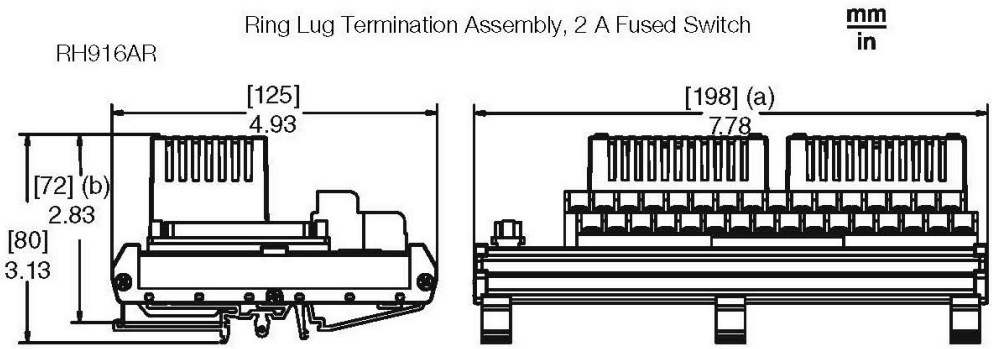

(a) Overall width – for determining DIN rail loading.
(b) Height above DIN rail (add to DIN rail height for total).

Related Documents

Document Number	Description
PSS 41H-2COV	*Compact 200 Series I/O Subsystem Overview*
B0400FA	*Standard and Compact 200 Series Subsystem User's Guide*
PSS 41H-2C200	*Compact 200 Series 16-Slot Horizontal Baseplate*
PSS 31H-2S200	*Standard 200 Series Subsystem Overview*
PSS 41H-2CERTS	*Standard and Compact 200 Series I/O, Agency Certifications*
PSS 41H-2C480	*Compact Power Supply - FPS480-24*
PSS 41S-3FCPICS	*Field Control Processor 280 (FCP280) Integrated Control Software*

Proposition 65

WARNING: This product can expose you to chemicals including lead and lead compounds, which are known to the State of California to cause cancer and birth defects or other reproductive harm. For more information go to www.P65Warnings.ca.gov.

Schneider Electric Systems USA, Inc.
70 Mechanic Street
Foxboro, Massachusetts 02035–2040
United States of America

Global Customer Support: https://pasupport.se.com

As standards, specifications, and design change from time to time, please ask for confirmation of the information given in this publication.

© 2015–2025 Schneider Electric. All rights reserved.

PSS 41H-2C240, Rev B