Foxboro™ DCS

Compact FBM237 0 to 20 mA Output Module (Redundant Ready)

PSS 41H-2C237

Product Specification

May 2025



https://www.se.com

Legal Information

The information provided in this document contains general descriptions, technical characteristics and/or recommendations related to products/solutions.

This document is not intended as a substitute for a detailed study or operational and site-specific development or schematic plan. It is not to be used for determining suitability or reliability of the products/solutions for specific user applications. It is the duty of any such user to perform or have any professional expert of its choice (integrator, specifier or the like) perform the appropriate and comprehensive risk analysis, evaluation and testing of the products/solutions with respect to the relevant specific application or use thereof.

The Schneider Electric brand and any trademarks of Schneider Electric SE and its subsidiaries referred to in this document are the property of Schneider Electric SE or its subsidiaries. All other brands may be trademarks of their respective owner.

This document and its content are protected under applicable copyright laws and provided for informative use only. No part of this document may be reproduced or transmitted in any form or by any means (electronic, mechanical, photocopying, recording, or otherwise), for any purpose, without the prior written permission of Schneider Electric.

Schneider Electric does not grant any right or license for commercial use of the document or its content, except for a non-exclusive and personal license to consult it on an "as is" basis.

Schneider Electric reserves the right to make changes or updates with respect to or in the content of this document or the format thereof, at any time without notice.

To the extent permitted by applicable law, no responsibility or liability is assumed by Schneider Electric and its subsidiaries for any errors or omissions in the informational content of this document, as well as any non-intended use or misuse of the content thereof.

Overview

The Compact FBM237, 0 to 20 mA Output Interface Module contains eight channel isolated 0 to 20 mA DC analog output channels. The outputs are galvanically isolated from other channels and ground. The module can be used as a single unit, or as a redundant pair.

When used as a redundant pair, the modules combine to provide redundancy at the Fieldbus Module (FBM) level, with field output signals wired to one common termination assembly (see Figure 1). Each module in the pair independently attempts to hold the output(s) at its specified output value(s).

Features

- Eight 20 mA DC analog output channels
- Each output channel is galvanically isolated
- Single or redundant modules
- Compact, rugged design suitable for enclosure in Class G3 (harsh) environments
- Termination Assemblies (TAs) for locally or remotely connecting field wiring to the Compact FBM237
- TA for use with Output Bypass Station to maintain outputs during maintenance operations
- 3-tier termination assembly for per channel internally and/or externally loop powered transmitters
- Electrically compatible with standard HART signals

Redundant Analog Outputs

When used as a redundant pair, each channel is connected to the same point number in each FBM. Then a redundant analog output block, AOUTR, is used for each redundant pair of outputs. The AOUTR block handles output writes and initialization logic for the redundant channels. On each execution cycle of the AOUTR block, identical reads are sent to each module, fully exercising the fieldbus and the logic circuitry of each module. When a failure is detected in one of the modules, its output is driven to 0 mA and the corresponding channel in the good module automatically continues supplying the proper current to the output current loop.

Each output channel drives an external load and produces a 0 to 20 mA output. Transmitter power from each module is diode OR'd together in the redundant adapter to help ensure redundant power. The microprocessor of each module executes the analog I/O application program, plus security routines that validate the health of the module.

Configurable options in the modules for output security include Fail-Safe Action (Hold/Fallback), Analog Output Fail-Safe Fallback Data (on a per channel basis), Fieldbus Fail-Safe Enable, and Fieldbus Fail-Safe Delay Time. The Analog Output Fail-Safe Fallback Data option must be set for 0 mA output. This removes one of the pair of redundant output channels from service for detectable problems such as a module not properly receiving output writes, or not passing security tests on FBM microprocessor writes to output registers. Setting of the Analog Output Fail-Safe Fallback Data option for 0 mA output also minimizes the possibility of a "fail high" result.

Figure 1 - Compact FBM237 Redundant Module Configuration

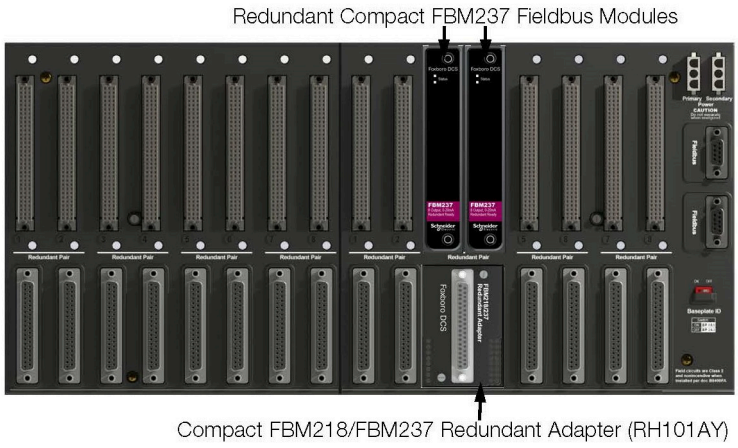

Compact Design

The Compact FBM237's design is narrower than the Standard 200 Series Fieldbus Modules (FBMs). It has a rugged Acrylonitrile Butadiene Styrene (ABS) exterior for physical protection of the circuits. Enclosures specially designed for mounting the FBMs provide various levels of environmental protection, up to harsh environments (Class G3), per ISA Standard S71.04.

High Reliability

The redundancy of the module pair, coupled with the high coverage of detected faults, provides a very high subsystem availability time.

Either module in the redundant pair may be replaced without upsetting field input or output signals to the good module. The module can be removed/replaced without removing field device termination cabling, power, or communications cabling.

Easy Removal/Replacement

The module mounts on a Compact 200 Series baseplate. Two screws on the FBM help attach the module to the baseplate.

Redundant modules must be located in adjacent positions on the baseplate, with the first module located in an odd-numbered position (for example, the positions labelled "3" and "4"). To achieve redundancy, a redundant adapter module is placed on the two adjacent baseplate termination cable connectors to provide termination for a single cable (see Figure 1). A single termination cable connects from the redundant adapter to the associated termination assembly (TA).

When redundant, either module may be replaced without upsetting field input signals to the good module. Each module can be removed/replaced without removing field termination cabling, power, or communications cabling.

Redundant Modules in Foxboro DCS HMI

The redundant pair of modules appear as two independent modules to system management software applications (such as Foxboro DCS System Manager and System Manager/Display Handler (SMDH)). The functional redundancy for these modules is provided by their associated control blocks.

Visual Indicators

Light-emitting diodes (LEDs) incorporated into the front of the module provide visual status indications of FBM functions.

Fieldbus Communication

A Fieldbus Communications Module or a Control Processor interfaces to the redundant 2 Mbps module Fieldbus used by the FBMs. The Compact FBM237 accepts communication from either path (A or B) of the 2 Mbps Fieldbus. If one path is unsuccessful or is switched at the system level, the module continues communication over the active path.

Termination Assemblies

Field I/O signals connect to the FBM subsystem via DIN rail mounted TAs. The TAs used with the Compact FBM237 are described in Termination Assemblies and Cables, page 11.

Functional Specifications

Output Channels	Eight 20 mA DC analog output channels. Each channel is isolated and independent. Redundant pairs (output) are connected by a common field I/O connector, and therefore are not isolated from each other.
Accuracy — Analog (includes linearity)	±0.05% of Span (between 0.1 mA and 20 mA) Accuracy temperature coefficient: ±50 ppm/°C
Output Load	750 Ω maximum
Output Processing Delay	30 ms maximum
Output Range (each channel)	0 to 20.4 mA DC
Resolution	13 bits
Field Device Cabling Distance	Maximum distance of the field device from the FBM is a function of compliance voltage (18 VDC at 20.4 mA output), wire gauge, and voltage drop at the field device.
HART® Protocol Compatibility	The channels meet the impedance requirements for a HART high Impedance Device and can be used in a HART loop without interfering with the HART signals between the field device and a Hand-Held Communicator (HHC).
Loop Power Supply Protection	Each channel is channel-to-channel galvanically isolated, current limited and voltage regulated. All analog outputs are limited by their design to about 25 mA.
Isolation	Each channel is galvanically isolated from all other channels and earth (ground). The module withstands, without damage, a potential of 600 VAC applied for one minute between any channel and ground, or between a given channel and any other channel. **⚠⚠DANGER** **HAZARD OF ELECTRIC SHOCK, EXPLOSION, OR ARC FLASH** Although the module can withstand a maximum of 600 VAC applied for one minute between any channel, DO NOT apply voltages beyond the published input ranges. The channels are NOT intended for permanent connection to hazardous voltage circuits. Understand that connection of these channels to voltages greater than 30 VAC or 60 VDC violates electrical safety code requirements and may expose users to electric shock. **Failure to follow these instructions will result in death or serious injury.**
Communication	Communication with its associated FCM or FCP via the module fieldbus.
Power Requirements	• Input Voltage Range (Redundant): 24 VDC +5%, -10% • Consumption (Maximum): 7 W • Heat Dissipation (Maximum): 5 W
Calibration Requirements	Calibration of the module and termination assembly is not required.
Regulatory Compliance: Electromagnetic Compatibility (EMC):	• *European EMC Directive 2004/108/EC (Prior to April 20, 2016) and 2014/30/EU (Beginning April 20, 2016)*: Meets: EN61326-1:2013 Class A Emissions and Industrial Immunity Levels

Regulatory Compliance: Product Safety	• *Underwriters Laboratories (UL) for U.S. and Canada*: UL/UL-C listed as suitable for use in UL/UL-C listed Class I, Groups A-D; Division 2; temperature code T4 enclosure based systems when connected to specified Foxboro DCS processor modules. Communications circuits also meet the requirements for Class 2 as defined in Article 725 of the National Electrical Code (NFPA No.70) and Section 16 of the Canadian Electrical Code (CSA C22.1). For more information, see the *Standard and Compact 200 Series Subsystem User's Guide* (B0400FA). • *European Low Voltage Directive 2006/95/EC (Prior to April 20, 2016) and 2014/35/EU (Beginning April 20, 2016) and Explosive Atmospheres (ATEX) directive 94/9/EC (Prior to April 20, 2016) and 2014/34/EU (Beginning April 20, 2016)* DEMKO certified as Ex nA IIC T4 for use in certified Zone 2 enclosure when connected to specified processor modules as described in the *Standard and Compact 200 Series Subsystem User's Guide* (B0400FA). **NOTE:** DEMKO Certification does not apply to Termination Assembly RH917QZ. See Table 1.
IECEx Certification	IECEx Certified

Environmental Specifications

	Operating	Storage
Temperature	• Module: -20 to +60°C (-4 to +140°F) • Termination Assembly – PA: -20 to +70°C (-4 to +158°F)	-40 to +70°C (-40 to +158°F)
Relative Humidity	5 to 95% (noncondensing)	5 to 95% (noncondensing)
Altitude	-300 to +3,000 m (-1,000 to +10,000 ft)	-300 to +12,000 m (-1,000 to +40,000 ft)
Vibration	0.75g (5 to 500 Hz)	
Contamination	Suitable for use in Class G3 (Harsh) environments as defined in ISA Standard S71.04, based on exposure testing according to EIA Standard 364-65, Class III.	

NOTE: The environment ranges can be extended by the type of enclosure containing the module. See the Product Specification Sheet (PSS) applicable to the enclosure that is to be used.

Physical Specifications

Mounting	• Module: The Compact FBM237 mounts on a Compact 200 Series 16-slot horizontal baseplate. The baseplate can be mounted on a horizontal DIN rail, or horizontally on a 19-inch rack using a mounting kit. Redundant modules must be located in odd and even adjacent positions on the baseplate (positions 1 and 2, 3 and 4, 5 and 6, 7 and 8, 9 and 10 (the second 1 and 2), 11 and 12 (the second 3 and 4), 13 and 14 (the second 5 and 6), or 15 and 16 (the second 7 and 8)). See *Compact 200 Series 16-Slot Horizontal Baseplate* (PSS 41H-2C200) for details. • Termination Assembly: The TA mounts on a DIN rail and accommodates multiple DIN rail styles including 32 mm (1.26 in) and 35 mm (1.38 in)
Weight	• Compact FBM237: 185 g (6.5 oz) approximate • Termination Assemblies: ◦ Compression: 181 g (0.40 lb, approximate) ◦ Ring Lug: 249 g (0.55 lb, approximate)
Dimensions - Module	• Height: 130 mm (5.12 in) • Width: 25 mm (0.98 in) • Depth: 150 mm (5.9 in) - Including baseplate connectors, 139 mm (5.46 in)
Dimensions - Termination Assemblies	See Dimensions - Nominal, page 14
Part Numbers	• Compact FBM237: RH101ET • Termination Assemblies: See Functional Specifications - Termination Assemblies, page 12 • Redundant Adapter: RH101AY

Termination Cables	• Cable Lengths: Up to 30 m (98 ft) • Cable Materials: Polyurethane or Low Smoke Zero Halogen (LSZH) • Termination Cable Type: Type 1 — see Table 2 • Cable Connection: ◦ FBM Baseplate End: 37-pin D-subminiature ◦ Termination Assembly End: 25-pin D-subminiature
Termination Assembly Construction	• Material: Polyamide Material, compression • Terminal Blocks: Outputs - 3 tiers, 8 positions Output Bypass Jacks - 8 (P0917QZ)
Field Termination Connections	• Compression — Accepted Wiring Sizes: ◦ Solid/Stranded/AWG: 0.2 to 4 mm^2/0.2 to 2.5 mm^2/24 to 12 AWG ◦ Stranded with Ferrules: 0.2 to 2.5 mm^2 with or without plastic collar • Ring Lug — Accepted Wiring Sizes: #6 size connectors (0.375 in (9.5 mm)) 0.5 to 4 mm^2/22 AWG to 12 AWG

Termination Assemblies and Cables

Field I/O signals connect to the FBM subsystem via DIN rail mounted termination assemblies, which are electrically passive. TAs for the Compact FBM237 are available in the following forms:

- Compression screw type using Polyamide (PA) material.

Each Compact FBM237 Termination Assembly and its associated termination cable provide feedthrough connection between eight 2-wire analog output signals and the Compact FBM237 Channel Isolated 0 to 20 mA Module.

The termination assembly can be used with a single Compact FBM237 or with a redundant pair. When used with a redundant module pair, the termination assembly is connected to the baseplate using a Compact FBM237 redundant adapter (RH101AY).

Termination Assembly (P0917QZ) includes built-in bypass jacks for each output channel. The bypass jacks accept a bypass plug from the Output Bypass Station (Foxboro P/N P0900HJ) or other external 20 mA sources. This option should be considered for applications where maintaining output during maintenance operations is desired.

See Functional Specifications - Termination Assemblies, page 12 for a list of TAs used with the Compact FBM237.

A removable termination cable connects the DIN rail mounted TA to the FBM via a field connector on the Modular baseplate in which the FBM is installed. Termination cables are available in the following materials:

- Polyurethane
- Low Smoke Zero Halogen (LSZH).

Termination cables are available in a variety of lengths, up to 30 meters (98 feet), allowing the termination assemblies to be mounted as needed by plant design. See Table 2 for a list of termination cables used with the TAs for the Compact FBM237.

Functional Specifications - Termination Assemblies

FBM Type	Output		TA Part Number[a]	Termination Type[b]	TA Cable Type[c]	TA Cert. Type[d]
	Qty.	Signal	PA			
Compact FBM237	8	0 to 20 mA	RH916YE	C	1	1,2
Compact FBM237	8	0 to 20 mA	RH917QZ with bypass jacks	C	1	4,5

(a) PA is polyamide rated from -20 to +70°C (-4 to +158°F).

(b) C = TA with compression terminals; RL = TA with ring lug terminals.

(c) See Table 2 for cable part numbers and specifications.

(d) See Table 1 for Termination Assembly certification definitions.

Table 1 - Certifications for Termination Assemblies

Type	Certification
Type 1	TAs are UL/UL-C listed as suitable for use in Class I; Groups A-D; Division 2 temperature code T4 hazardous locations. They are DEMKO certified Ex nA IIC T4 for use in Zone 2 potentially explosive atmospheres.
Type 2	TAs are UL/UL-C listed as associated apparatus for supplying non-incendive field circuits Class I; Groups A-D; Division 2 hazardous locations when connected to specified DIN rail mounted FBMs and field circuits meeting entity parameter constraints specified in *Standard and Compact 200 Series Subsystem User's Guide* (B0400FA). They are also DEMKO certified as associated apparatus for supplying field circuits for Group IIC, Zone 2 potentially explosive atmospheres. Field circuits are also Class 2 limited energy (60 VDC, 30 VAC, 100 VA or less) if customer-supplied equipment meets Class 2
Type 4	All field circuits are Class 2 limited energy (60 VDC, 30 VAC, 100 VA or less) if customer-supplied equipment meets Class 2 limits.
Type 5	The TA and its field circuitry are for use in only ordinary (non-hazardous) locations.

Table 2 - Cable Types and Part Numbers

Cable Length m (ft)	Type 1 P/PVC[a]	Type 1 LSZH[b]
0.5 (1.6)	RH100BY	RH100BC
1.0 (3.2)	RH100BZ	RH100BD
1.5 (4.9)	RH100EP	RH100EL
2.0 (6.6)	RH100CA	RH100BE
3.0 (9.8)	RH100CB	RH100BF
5.0 (16.4)	RH100CC	RH100BG
10.0 (32.8)	RH100CD	RH100BH
15.0 (49.2)	RH100CE	RH100BJ
20.0 (65.6)	RH100CF	RH100BK
25.0 (82.0)	RH100CG	RH100BL
30.0 (98.4)	RH100CH	RH100BM

(a) P/PVC is polyurethane outer jacket and semi-rigid PVC primary conductor insulation. Temperature range: -20 to +80°C (-4 to +176°F).

(b) Low smoke zero halogen or low smoke free of halogen (LSZH) is a material classification used for cable jacketing. LSZH is composed of thermoplastic or thermoset compounds that emit limited smoke and no halogen when exposed to high sources of heat. Temperature range: -40 to +105°C (-40 to +221°F).

Dimensions - Nominal

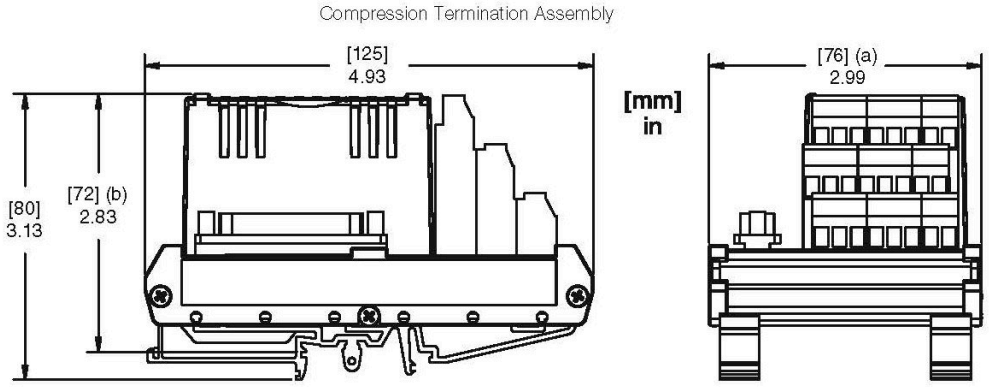

(a) Overall width — for determining DIN rail loading.

(b) Height above DIN rail (add to DIN rail height for total).

Related Documents

Document Number	Description
PSS 41H-2COV	*Compact 200 Series I/O Subsystem Overview*
B0400FA	*Standard and Compact 200 Series Subsystem User's Guide*
PSS 41H-2C200	*Compact 200 Series 16-Slot Horizontal Baseplate*
PSS 21H-2S200	*Standard 200 Series Subsystem Overview*
PSS 41H-2CERTS	*Standard and Compact 200 Series I/O - Agency Certifications*
PSS 41H-2C480	*Compact Power Supply - FPS480-24*
PSS 41S-3FCPICS	*Field Control Processor 280 (FCP280) Integrated Control Software*

Proposition 65

WARNING: This product can expose you to chemicals including lead and lead compounds, which are known to the State of California to cause cancer and birth defects or other reproductive harm. For more information go to www.P65Warnings.ca.gov.

Schneider Electric Systems USA, Inc.
70 Mechanic Street
Foxboro, Massachusetts 02035–2040
United States of America

Global Customer Support: https://pasupport.se.com

As standards, specifications, and design change from time to time, please ask for confirmation of the information given in this publication.

© 2015–2025 Schneider Electric. All rights reserved.

PSS 41H-2C237, Rev B