Foxboro™ DCS

Compact FBM218 HART® Communication Redundant Output Interface Module

PSS 41H-2C218

Product Specification

May 2025



https://www.se.com

Legal Information

The information provided in this document contains general descriptions, technical characteristics and/or recommendations related to products/solutions.

This document is not intended as a substitute for a detailed study or operational and site-specific development or schematic plan. It is not to be used for determining suitability or reliability of the products/solutions for specific user applications. It is the duty of any such user to perform or have any professional expert of its choice (integrator, specifier or the like) perform the appropriate and comprehensive risk analysis, evaluation and testing of the products/solutions with respect to the relevant specific application or use thereof.

The Schneider Electric brand and any trademarks of Schneider Electric SE and its subsidiaries referred to in this document are the property of Schneider Electric SE or its subsidiaries. All other brands may be trademarks of their respective owner.

This document and its content are protected under applicable copyright laws and provided for informative use only. No part of this document may be reproduced or transmitted in any form or by any means (electronic, mechanical, photocopying, recording, or otherwise), for any purpose, without the prior written permission of Schneider Electric.

Schneider Electric does not grant any right or license for commercial use of the document or its content, except for a non-exclusive and personal license to consult it on an "as is" basis.

Schneider Electric reserves the right to make changes or updates with respect to or in the content of this document or the format thereof, at any time without notice.

To the extent permitted by applicable law, no responsibility or liability is assumed by Schneider Electric and its subsidiaries for any errors or omissions in the informational content of this document, as well as any non-intended use or misuse of the content thereof.

Overview

The Compact FBM218 module offers redundant modules for eight output channels, each providing a 4 to 20 mA output signal or a digital HART® signal superimposed on a 4 to 20 mA analog output signal (the signals are electrically compatible).

The Compact HART Communication Redundant Output Interface Module (FBM218) contains eight channel-isolated output channels. The Compact FBM218 supports any mix of standard 4 to 20 mA devices and HART devices, and is part of the Compact 200 Series I/O subsystem described in *Compact 200 Series I/O Subsystem Overview* (PSS 41H-2COV).

A pair of the modules combines to provide redundancy at the Fieldbus Module (FBM) level, with field output signals wired to one common termination assembly (see Figure 1, page 4). In this configuration, one Compact FBM218 is the Master, and the other is the Tracker.

The Compact FBM218 can serve as a HART communications field device host, enabling Foxboro™ DCS to request and receive two digital messages per second from the field device. The message pass through capability can support HART universal, common practice, and device-specific commands, but it cannot support the burst communication mode. These commands are implemented using the Foxboro DCS Field Device Expert for HART. For more details, see *Field Device Expert for HART Devices Control and I/O* (PSS 41S-10FDMHRT).

The module provides an isolated power supply for each channel.

Features

- 8 channel-isolated output channels, each providing one of the following outputs:
  - Standard 4 to 20 mA analog output signal
  - Digital HART Frequency Shift Keying (FSK) signal superimposed on a 4 to 20 mA analog output signal
- Module pair offers redundancy at the FBM level
- FSK modem dedicated to each output channel for bi-directional digital communications with a HART field device
- Support for HART universal commands necessary to interface the field device with the Foxboro DCS
- Galvanic isolation of all output channels from each other, from ground, and from module logic
- Compact, rugged design suitable for enclosure in Class G3 (harsh) environments
- Termination Assemblies (TAs) for locally or remotely connecting field wiring to the Compact FBM218

Compact Design

The Compact FBM218's design is narrower than the standard 200 Series FBMs. It has a rugged acrylonitrile butadiene styrene (ABS) exterior for physical protection of the circuits. Enclosures specially designed for mounting the FBMs provide various levels of environmental protection, up to harsh environments per ISA Standard S71.04.

Figure 1 - Compact FBM218 Redundant Module Configuration

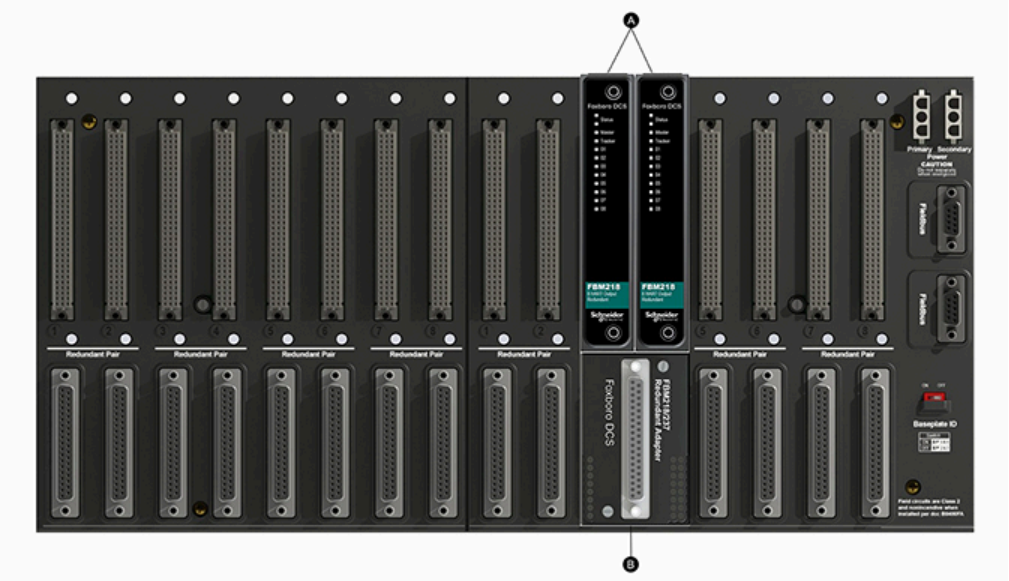

Legend	
A	Redundant Compact FBM218 Fieldbus Modules
B	Compact FBM218 Redundant Adapter (RH101AY)

High Reliability

The redundancy of the module pair, coupled with the high coverage of detected faults, provides very high subsystem availability.

Either module may be replaced without upsetting field signals to the other module. A module can be removed or replaced without removing field device termination cabling, power, or communications cabling.

Redundant Analog Inputs

If a failure is detected in one of the modules, its output is driven to 0 mA and the corresponding channel in the good module automatically continues supplying the proper current to the output current loop.

Each output channel drives an external load and produces a 0 to 20 mA output. Outputs are combined in series through the redundant adapter. The microprocessor of each module executes the analog I/O application program, plus security routines that validate the health of the FBM.

Configurable options in the modules for output security include Fail-Safe Action (Hold/Fallback), Analog Output Fail-Safe Fallback Data (on a per channel basis), Fieldbus Fail-Safe Enable, and Fieldbus Fail-Safe Delay Time. The Analog Output Fail-Safe Fallback Data option must be set for 0 mA output. This removes one of the pair of redundant output channels from service for detectable problems such as a module not properly receiving output writes or not passing security tests on FBM microprocessor writes to output registers. Setting of the Analog Output Fail-Safe Fallback Data option for 0 mA output also minimizes the possibility of a “fail high” result.

Visual Indicators

Light-emitting diodes (LEDs) incorporated into the front of the module provide visual indication of the module’s operational status, and communication activity of the channels. Two additional LEDs provide the master or tracker status of the modules.

Easy Removal/Replacement

The module mounts on a Compact 200 Series baseplate which is either DIN rail mounted or rack mounted horizontally, and includes signal connectors for redundant fieldbus, redundant independent DC power, and termination cables. Two screws on the FBM help secure the module to the Compact 200 Series baseplate.

Redundant modules must be located in adjacent positions on the baseplate, with the first module located in an odd-numbered position (for example, the positions labelled “3” and “4”). To achieve redundancy, a redundant adapter module is placed on the two adjacent baseplate termination cable connectors to provide termination for a single cable (see Figure 1). A single termination cable connects from the redundant adapter to the associated termination assembly (TA).

The module can be removed/replaced without removing field device termination cabling, power, or communication cabling.

Fieldbus Communication

A Fieldbus Communication Module or a Control Processor interfaces the redundant 2 Mbps module Fieldbus used by the FBMs. The Compact FBM218 module accepts communication from either path (A or B) of the redundant 2 Mbps fieldbus. If one path is unsuccessful or is switched off at the system level, the module continues communication over the active path.

Modular Baseplate Mounting

The modules mount on a modular baseplate, which accommodates up to 16 compact FBMs. The baseplate is either DIN rail mounted or rack mounted, and includes signal connectors for redundant fieldbus, redundant independent DC power, and termination cables.

Redundant modules must be located in adjacent positions on the baseplate (positions 1 and 2, 3 and 4, 5 and 6, or 7 and 8). To achieve redundancy, a redundant adapter module is placed on the two adjacent baseplate termination cable connectors to provide a single termination cable connection (see Figure 1, page 4). A single termination cable connects from the redundant adapter to the associated termination assembly (TA).

Termination Assemblies

Field output signals connect to the FBM subsystem via DIN rail mounted termination assemblies (TAs). The TAs used with the Compact FBM218 are described in Termination Assemblies And Cables, page 13.

Functional Specifications

Field Device Channels	• Supported HART Instrument Types: HART instruments compliant to Version 5, 6, or 7 of the HART specifications may be used • Interface: 8 isolated output channels • Communications To The Device: Point-to-point, master/slave, asynchronous, half-duplex, at 1,200 baud • System Checking: Parity on each byte, and 32-bit CRC system checking on each message • Speed: 2 messages per second • Fastest Allowed ECB Block Period: 100 ms; however, it is recommended that you see the *Sizing Guidelines and Excel Workbook* appropriate for your Control Processor to determine the optimal loading for a 100 ms Block Processing Cycle (BPC). • Maximum Distance (FBM218 to Device): Meets HART FSK physical layer specification HCF_SPEC-54, Revision 8.1 [up to 3030 m (10,000 ft)][(a)] • Current Outputs: ◦ Analog Accuracy (Includes Linearity): ±0.05% of span (between 4 mA and 20 mA) ◦ Output Load: 750 Ω maximum ◦ Maximum Rate of Change: 20 mA in 60 milliseconds ◦ Resolution: 13 bits
Loop Power Supply Protection	Each channel is channel-to-channel galvanically isolated, current limited, and voltage regulated. All outputs are limited by their design to about 25 mA. If the output FET shorts, the output current could increase up to 100 mA. In normal operation, the FBM outputs a constant current into a 0 to 750 ohms load.

Isolation	The channels are galvanically isolated (both optical and transformer isolation) from each other, and from ground and module logic. The module withstands, without damage, a potential of 600 VAC applied for one minute between the isolated channels and ground. **⚠⚠DANGER** **HAZARD OF ELECTRIC SHOCK, EXPLOSION, OR ARC FLASH** Although the module can withstand a maximum of 600 VAC applied for one minute between any channel, DO NOT apply voltages beyond the published input ranges. The channels are NOT intended for permanent connection to hazardous voltage circuits. Understand that connection of these channels to voltages greater than 30 VAC or 60 VDC violates electrical safety code requirements and may expose users to electric shock. **Failure to follow these instructions will result in death or serious injury.**
FieldbusCommunication	Communicates with its associated FCM or FCP via the redundant 2 Mbps HDLC fieldbus
Power Requirements	• Input Voltage Range: 24 VDC +5%, -10% • Consumption: 8 W (maximum) • Heat Dissipation: 4 W (maximum)
Calibration Requirements	Calibration of the module and termination assembly is not required
Regulatory Compliance, Electromagnetic Compatibility (EMC)	European EMC Directive 2004/108/EC (Prior to April 20, 2016) and 2014/30/EU (Beginning April 20, 2016) Meets: EN61326-1:2013 Class A Emissions and Industrial Immunity Levels
Regulatory Compliance, Product Safety	• *Underwriters Laboratories (UL) for U.S. and Canada* UL/UL-C listed as suitable for use in UL/UL-C listed Class I, Groups A-D; Division 2; temperature code T4 enclosure based systems when connected to specified Foxboro DCS processor modules. Communications circuits also meet the requirements for Class 2 as defined in Article 725 of the National Electrical Code (NFPA No.70) and Section 16 of the Canadian Electrical Code (CSA C22.1). For more information, see *Standard and Compact 200 Series Subsystem User's Guide* (B0400FA). • *European Low Voltage Directive 2006/95/EC (Prior to April 20, 2016) and 2014/35/EU (Beginning April 20, 2016) and Explosive Atmospheres (ATEX) directive 94/9/EC (Prior to April 20, 2016) and 2014/34/EU (Beginning April 20, 2016)* DEMKO certified as Ex nA IIC T4 for use in certified Zone 2 enclosure when connected to specified processor modules as described in the *Standard and Compact 200 Series Subsystem User's Guide* (B0400FA). For use in an enclosure suited for an ATEX Zone 2 classified area. Also, see Table 1, page 14.
RoHS Compliance	Complies with European RoHS Directive 2011/65/EU, including amending Directives 2015/863 and 2017/2102

IECEx Certification	IECEx Certified
[a] The maximum allowable distance decreases when the loop is operated through an intrinsic safety barrier. The maximum distance of the field device from the FBM is a function of compliance voltage (19 VDC at 20.4 mA), wire and load resistance, and voltage drop at the field device.	

Environmental Specifications

	Operating	Storage
Temperature	• Module: -20 to +60°C (-4 to +140°F) • Termination Assembly - PA (Polyamide): -20 to +70°C (-4 to +158°F)	-40 to +70°C (-40 to +158°F)
Relative Humidity	5 to 95% (noncondensing)	5 to 95% (noncondensing)
Altitude	-300 to +3,000 m (-1,000 to +10,000 ft)	-300 to +12,000 m (-1,000 to +40,000 ft)
Contamination	Suitable for use in Class G3 (Harsh) environments as defined in ISA Standard S71.04, based on exposure testing according to EIA Standard 364-65, Class III.	
Vibration	0.75g from (5 to 500 Hz)	

Physical Specifications

	Compact FBM218	Termination Assembly
Mounting	The Compact FBM218 mounts on a Compact 200 Series 16-slot horizontal baseplate. The baseplate can be mounted on a horizontal DIN rail, or on a 19-inch rack using a mounting kit. See *Compact 200 Series 16-Slot Horizontal Baseplate* (PSS 41H-2C200) for details.	The Termination Assembly (TA) mounts on a DIN rail and accommodates multiple DIN rail styles including 32 mm (1.26 in) and 35 mm (1.38 in)
Weight	185 g (6.5 oz) approximate	• Compression: 181 g (0.40 lb) approximate • Ring Lug: 249 g (0.55 lb) approximate
Dimensions	• Height: 130 mm (5.12 in) • Width: 25 mm (0.98 in) • Depth: 150 mm (5.9 in) - Including baseplate connectors, 139 mm (5.46 in)	• Compression Screw: See Figure 2 • Ring Lug: See Figure 3
Part Numbers	• Compact FBM218: RH101AE • Redundant Adapter: RH101AY	See Functional Specifications - Termination Assemblies, page 14
Termination Cables	• Cable Lengths: Up to 30 m (98 ft) • Cable Materials: Polyurethane or Low Smoke Zero Halogen • Termination Cable Type: Type 1 – See Table 2, page 15	
Cable Connection — TA	• FBM Baseplate End: 37-pin D-subminiature	• Termination Assembly End: 25-pin D-subminiature

Construction - Termination Assembly	• Material: Polyamide (PA), compression • Family Group Color: Green – communication • Terminal Blocks: • Outputs – 3 tiers, 8 positions
Field Termination Connections	Compression — Accepted Wiring Sizes: • Solid/Stranded/AWG: 0.2 to 4 mm^2/0.2 to 2.5 mm^2/24 to 12 AWG • Stranded with Ferrules: 0.2 to 2.5 mm^2 with or without plastic collar Ring-Lug — Accepted Wiring Sizes: • #6 size connectors (0.375 in (9.5 mm)) • 0.5 to 4 mm^2/22 AWG to 12 AWG

Termination Assemblies and Cables

Field output signals connect to the FBM subsystem via DIN rail mounted Termination Assemblies (TAs), which are electrically passive. TAs for the Compact FBM218 are available in the following forms:

- Compression screw type using Polyamide material

See Functional Specifications - Termination Assemblies, page 14 for a list of TAs used with the Compact FBM218.

The Compact FBM218 provides sufficient loop resistance to allow use of the HART Hand-Held Terminal or PC20 Intelligent Field Device Configurator.

A removable termination cable connects the DIN rail mounted TA to the FBM via a field connector on the baseplate in which the FBM is installed. Termination cables are available in the following materials:

- Polyurethane
- Low Smoke Zero Halogen (LSZH)

Termination cables are available in a variety of lengths, up to 30 meters (98 feet), allowing the Termination Assembly to be mounted in either the enclosure or in an adjacent enclosure. See Table 2, page 15 for a list of termination cables used with the TAs for the Compact FBM218.

Functional Specifications - Termination Assemblies

FBM Type	Output Signal	TA Part Number PA[a]	Term. Type[b]	TA Cable Type[c]	TA Cert. Type[d]
Compact FBM218	8 output channels 4 to 20 mA analog signal, alone or with HART signal superimposed	RH926SP (supersedes P0926SP, P0917XV)	C	1	1, 2

(a) PA is polyamide rated from -20 to +70°C (-4 to +158°F).

(b) C = Termination Assembly (TA) with compression terminals, RL = TA with ring lug terminals.

(c) See Table 2, page 15 for cable part numbers and specifications.

(d) See Table 1, page 14 TA certification definitions.

Table 1 - Certifications for Termination Assemblies

Type	Certification[a]
Type 1	TAs are UL/UL-C listed as suitable for use in Class I; Groups A-D; Division 2 temperature code T4 hazardous locations. They are DEMKO certified Ex nA IIC T4 for use in Zone 2 potentially explosive atmospheres.
Type 2	TAs are UL/UL-C listed as associated apparatus for supplying non-incendive field circuits Class I; Groups A-D; Division 2 hazardous locations when connected to specified DIN rail mounted FBMs and field circuits meeting entity parameter constraints specified in *Standard and Compact 200 Series Subsystem User's Guide* (B0400FA). They are also DEMKO certified as associated apparatus for supplying field circuits for Group IIC, Zone 2 potentially explosive atmospheres. Field circuits are also Class 2 limited energy (60 VDC, 30 VAC, 100 VA or less) if customer-supplied equipment meets Class 2 limits.

(a) All TAs are UL/UL-C listed to comply with applicable ordinary location safety standards for fire and shock hazards. Hazardous location types comply with ATEX directive for II 3 G use. They also comply with the requirements of the European Low Voltage Directive. All listings/certifications require installation and use within the constraints specified in *Standard and Compact 200 Series Subsystem User's Guide* (B0400FA) and the conditions stated in UL and DEMKO reports.

Table 2 - Cables Types and Part Numbers

Cable Length m (ft)	Type 1 P/PVC[a]	Type 1 LSZH[b]
0.5 (1.6)	RH100BY	RH100BC
1.0 (3.2)	RH100BZ	RH100BD
1.5 (4.9)	RH100EP	RH100EL
2.0 (6.6)	RH100CA	RH100BE
3.0 (9.8)	RH100CB	RH100BF
5.0 (16.4)	RH100CC	RH100BG
10.0 (32.8)	RH100CD	RH100BH
15.0 (49.2)	RH100CE	RH100BJ
20.0 (65.6)	RH100CF	RH100BK
25.0 (82.0)	RH100CG	RH100BL
30.0 (98.4)	RH100CH	RH100BM

(a) P/PVC is polyurethane outer jacket and semi-rigid PVC primary conductor insulation. Temperature range: -20 to +80°C (-4 to +176°F).

(b) Low smoke zero halogen or low smoke free of halogen (LSZH) is a material classification used for cable jacketing. LSZH is composed of thermoplastic or thermoset compounds that emit limited smoke and no halogen when exposed to high sources of heat. Temperature range: -40 to +105°C (-40 to +221°F).

Dimensions - Nominal

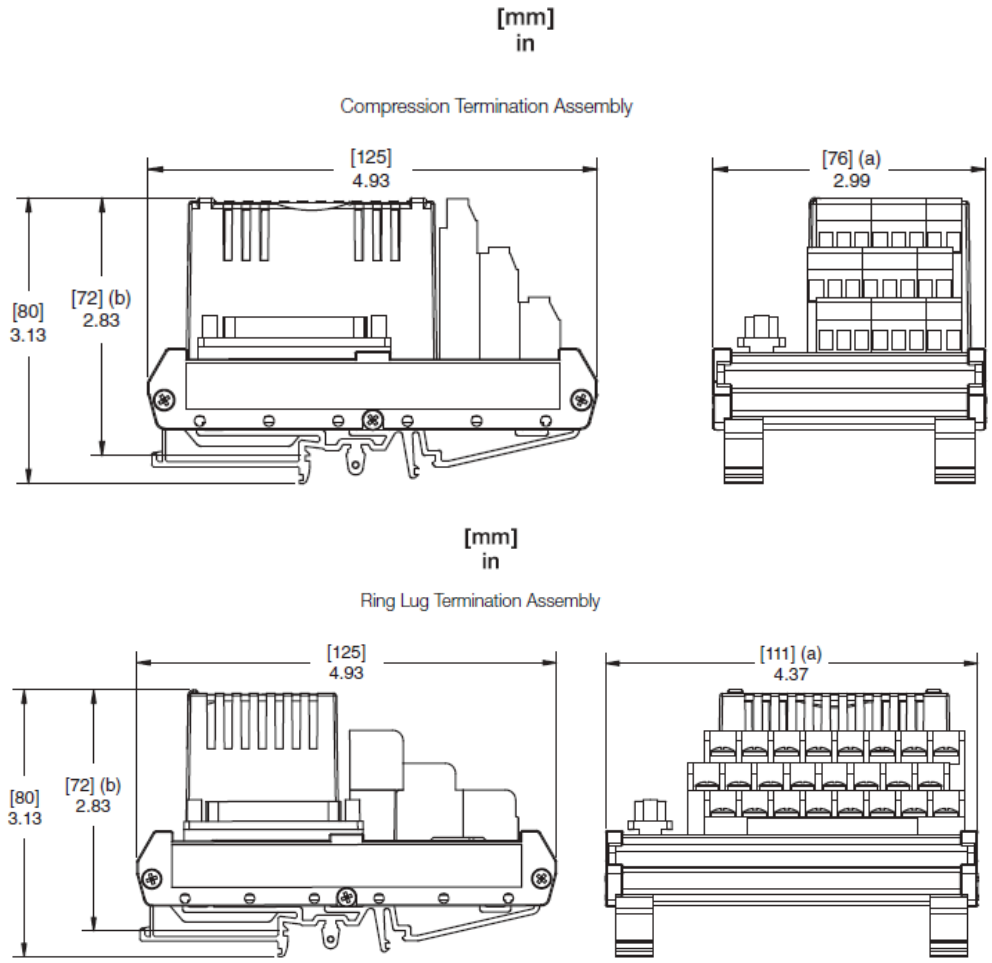

(a) Overall width – for determining DIN rail loading.

(b) Height above DIN rail (add to DIN rail height for total)

Related Documents

Document Number	Description
PSS 41H-2COV	*Compact 200 Series I/O Subsystem Overview*
PSS 41S-10FDMHRT	*Field Device Expert for HART Devices Control and I/O*
B0400FA	*Standard and Compact 200 Series Subsystem User's Guide*
PSS 41H-2C200	*Compact 200 Series 16-Slot Horizontal Baseplate*
PSS 2A-1Z3E	*Model PC20 Intelligent Field Device Configurator for Use with Transmitter with FoxCom or HART Communication Protocol*
PSS 31H-2W12 B3	*DIN Rail Mounted Compact 200 Series I/O Equipment, Agency Certifications*
PSS 41H-2C480	*Compact Power Supply - FPS480-24*
PSS 41S-3FCPICS	*Field Control Processor 280 (FCP280) Integrated Control Software*

Proposition 65

WARNING: This product can expose you to chemicals including lead and lead compounds, which are known to the State of California to cause cancer and birth defects or other reproductive harm. For more information go to www.P65Warnings.ca.gov.

Schneider Electric Systems USA, Inc.
70 Mechanic Street
Foxboro, Massachusetts 02035–2040
United States of America

Global Customer Support: https://pasupport.se.com

As standards, specifications, and design change from time to time, please ask for confirmation of the information given in this publication.

© 2015–2025 Schneider Electric. All rights reserved.

PSS 41H-2C218, Rev B