# Foxboro™ DCS

## Compact FBM216b HART® Communication Redundant Input Interface Module

## PSS 41H-2C216

**Product Specification**

**May 2025**




https://www.se.com

# Legal Information

The information provided in this document contains general descriptions, technical characteristics and/or recommendations related to products/solutions.

This document is not intended as a substitute for a detailed study or operational and site-specific development or schematic plan. It is not to be used for determining suitability or reliability of the products/solutions for specific user applications. It is the duty of any such user to perform or have any professional expert of its choice (integrator, specifier or the like) perform the appropriate and comprehensive risk analysis, evaluation and testing of the products/solutions with respect to the relevant specific application or use thereof.

The Schneider Electric brand and any trademarks of Schneider Electric SE and its subsidiaries referred to in this document are the property of Schneider Electric SE or its subsidiaries. All other brands may be trademarks of their respective owner.

This document and its content are protected under applicable copyright laws and provided for informative use only. No part of this document may be reproduced or transmitted in any form or by any means (electronic, mechanical, photocopying, recording, or otherwise), for any purpose, without the prior written permission of Schneider Electric.

Schneider Electric does not grant any right or license for commercial use of the document or its content, except for a non-exclusive and personal license to consult it on an "as is" basis.

Schneider Electric reserves the right to make changes or updates with respect to or in the content of this document or the format thereof, at any time without notice.

**To the extent permitted by applicable law, no responsibility or liability is assumed by Schneider Electric and its subsidiaries for any errors or omissions in the informational content of this document, as well as any non-intended use or misuse of the content thereof.**

# Overview

The Compact FBM216b HART Communication Redundant Input Interface Module contains eight individually isolated input channels. It supports any mix of standard 4 to 20 mA devices and HART devices (the signals are electrically compatible).

A pair of modules combines to provide redundancy at the Fieldbus Module (FBM) level, with field inputs wired to one common termination assembly (TA) (see Figure 1). In this configuration, one Compact FBM216b is the Master, and the other is the Tracker.

The Compact FBM216b can serve as a HART communications field device host, enabling Foxboro™ DCS to request and receive two digital messages per second from the field device. The message pass-through capability can be used to support HART universal, common practice, and device-specific commands, but it cannot support the burst communication mode. These commands are implemented using the Foxboro DCS Field Device Expert for HART. For details, see *Field Device Expert for HART Devices Control and I/O* (PSS 41S-10FDMHRT).

The Compact FBM216b provides individually isolated power supplies to power each of the eight channels.

Optionally, the channels for this module can be powered by an external power supply. However, when a common external power supply is used with two or more channels, a Cable Balun module is required to help prevent HART communication channel crosstalk.

# Features

- 8 individually isolated analog input channels. Each channel accepts one of the following inputs:
  - Standard 4 to 20 mA analog sensor signal
  - Digital HART Frequency Shift Keying (FSK) signal superimposed on a 4 to 20 mA analog signal
- Module pair offers redundancy at the FBM level
- FSK modem dedicated to each input channel for bi-directional digital communications with a HART field device
- Analog to digital conversion of each of the 4 to 20 mA input signal from the HART devices
- Support for the HART universal commands necessary to interface the field device with the Foxboro DCS database
- Per channel galvanic isolation of each of the eight input channels from each other, ground and module logic
- Compact, rugged design suitable for enclosure in Class G3 (harsh) environments
- High accuracy achieved by sigma-delta analog to digital conversions for each channel
- Termination Assembly (TA) for locally or remotely connecting field wiring to the Compact FBM216b
- TA provide for per channel internally and/or externally loop powered transmitters

# High Accuracy

For high accuracy, the module incorporates a sigma-delta analog-to-digital converter which can provide new analog input values for each channel every 100 milliseconds.

# Compact Design

The Compact FBM216b's design is narrower than the standard 200 Series FBMs. It has a rugged acrylonitrile butadiene styrene (ABS) exterior for physical protection of the circuits. Enclosures specially designed for mounting the FBMs provide various levels of environmental protection, up to harsh environments per ISA Standard S71.04.

**Figure 1 - Compact FBM216b Redundant Module Configuration**

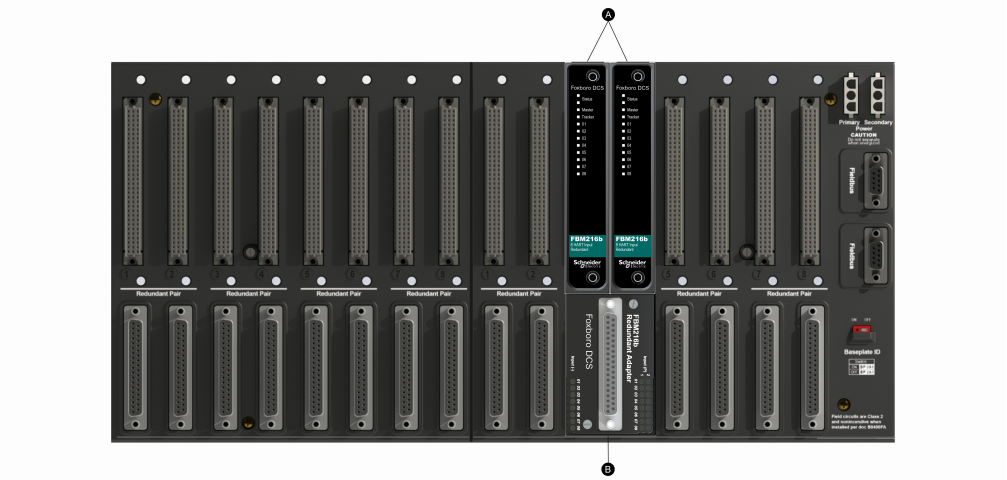


| Legend | |
|---|---|
| A | Redundant Compact FBM216b Fieldbus Modules |
| B | Compact FBM216b Redundant Adapter (RH101AX) |

# High Reliability

The redundancy of the module pair, coupled with the high coverage of detected faults, provides very high subsystem availability time.

Either module may be replaced without upsetting field input signals to the other module. A module can be removed or replaced without removing field device termination cabling, power, or communications cabling.

# Redundant Analog Inputs

For each input operation, identical signals are sent to both redundant modules, fully exercising the Fieldbus and the logic circuitry of each module. Each input channel accepts an analog sensor input or a self-powered 4 to 20 mA source. Device power from each module is diode OR together in the redundant adapter to help ensure redundant power.

The microprocessor of each module executes the analog I/O application program, plus security routines that validate the health of the FBM. Input channel availability is enhanced by redundantly powering the input current loop from per-channel power supplies in each module of the pair.

# Visual Indicators

Light-emitting diodes (LEDs) incorporated into the front of the module provide visual indication of the module's operational and master or tracker status and communication activity on the channels. Red and green LEDs indicate module power and boot status. Two yellow LEDs indicate Redundancy (Master/Tracker) status.

# Easy Removal/Replacement

The module mounts on a Compact 200 Series baseplate which is either DIN rail mounted or rack mounted horizontally, and includes signal connectors for redundant Fieldbus, redundant independent DC power, and termination cables. Two screws on the FBM attach the module to the Compact 200 Series baseplate.

Redundant modules must be located in adjacent positions on the baseplate, with the first module located in an odd-numbered position (for example, the positions labelled "3" and "4"). To achieve redundancy, a redundant adapter module is placed on the two adjacent baseplate termination cable connectors to provide termination for a single cable (see Figure 1). A single termination cable connects from the redundant adapter to the associated termination assembly (TA).

When redundant, either module may be replaced without upsetting field input signals to the good module. Each module can be removed/replaced without removing field termination cabling, power, or communications cabling.

# Fieldbus Communication

A Fieldbus Communication Module or a Control Processor interfaces the redundant 2 Mbps module Fieldbus used by the FBMs. The Compact FBM216b accepts communication from either path (A or B) of the redundant 2 Mbps fieldbus. If one path is unsuccessful or is switched off at the system level, the module continues communication over the active path.

The use of an external power supply common to two or more loops requires a Cable Balun module to maintain communication signal line balance.

# Termination Assemblies

Field input signals connect to the FBM subsystem via DIN rail mounted Termination Assemblies (TAs). The TA used with the Compact FBM216b is described. in Termination Assemblies and Cables, page 13.

# Cable Balun Module

The Cable Balun module is used to maintain digital communication line balance for HART Transmitter to FBM loops that are powered from a common external power supply. This powering effectively connects one line of each loop together. Without the Baluns, the common connection at the external power supply would cause near end crosstalk at the system end of the loop. Loops using FBM internal power source do not require Cable Baluns.

The Cable Balun module contains multiple Baluns. One Balun segment is interconnected in each externally-powered loop. There is one Cable Balun module for four channels.

| Cable Balun Module | | |
|---|---|---|
| **Module Model** | **Module Part No.** | **No. of Baluns in the Module** |
| CBM-4 | RH903SV | 4 |

**Figure 2 - Cable Balun Module**

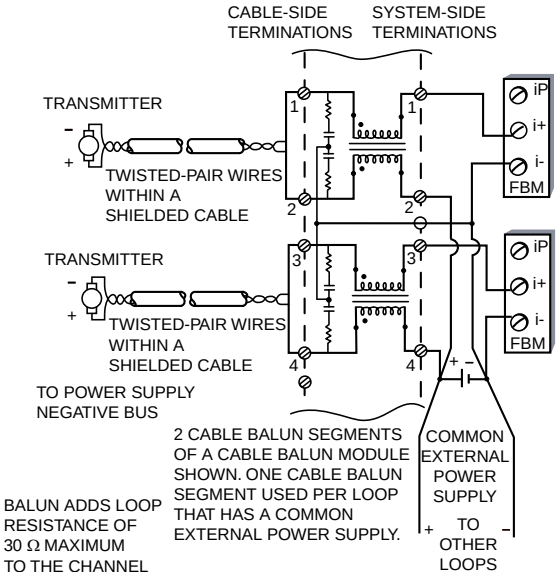


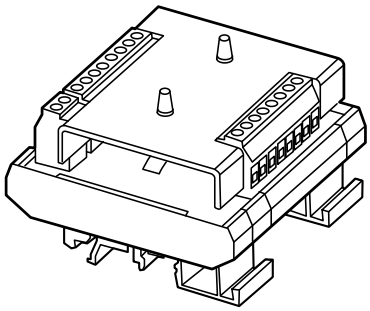

**CABLE BALUN MODULE**

# Functional Specifications

| | |
|---|---|
| Field Device Channels | • Supported HART Instrument Types:<br>HART instruments compliant to Version 5, 6, or 7 of the HART specifications may be used<br>• Interface:<br>8 individually isolated channels<br>• Communication to the Device:<br>Point-to-point, master/slave, asynchronous, half-duplex, at 1200 baud<br>• Error Checking:<br>Parity on each byte, and one CRC check byte<br>• Speed:<br>2 messages per second<br>• Fastest Allowed ECB Block Period:<br>100 milliseconds; however, it is recommended that you see the *Sizing Guidelines and Excel Workbook* appropriate for your Control Processor to determine the optimal loading for a 100 milliseconds Block Processing Cycle (BPC).<br>• Maximum Distance (FBM216b to Field Device):<br>Meets HART FSK physical layer specification HCF_SPEC-54, Revision 8.1 [up to 3030 m (10000 ft)][(a)]<br>• Internal Loop Supply Compliance Voltage at Termination Assembly (TA):<br>18.5 VDC minimum at 20.5 mA<br>• Current Inputs:<br>◦ Sense Resistor: 280 Ω ± 0.02%<br>◦ Total Input Resistance Including Redundancy Adapter: 280 Ω nominal<br>◦ Analog Accuracy (included Nonlinearity): ± 0.075% of full scale<br>◦ Temperature Coefficient: 50 PPM/°C<br>◦ Resolution: 15 bits<br>◦ Update Rate: 100 ms<br>◦ Integration Time: 500 ms<br>◦ Common Mode Rejection: >100 dB at 50 or 60 Hz<br>◦ Normal Mode Rejection: >35 dB at 50 or 60 Hz<br>• Loop Power Supply Protection:<br>Each channel is individually galvanically isolated, current limited and voltage regulated. All field connections are limited by their design to less than 37 mA with a single module installed (72 mA when redundant modules are installed).<br>• System Software:<br>Requires I/A Series software v8.8 or Foxboro DCS Control Core Services v9.0 or later.<br>• Input Resistance including TA and Redundancy Adapter:<br>◦ Externally Powered: 282 Ω<br>◦ Internally Powered: 302 Ω<br>• FBM Internal Power for Field Device:<br>Per channel isolated 24 VDC ±10% supply. Loop supply output impedance is 20 W including the TA. |

| | |
|---|---|
| | • Isolation:<br>The individual channel inputs and loop supplies are galvanically isolated from each other, ground and module logic. The module's isolation is designed to withstand, without damage, a common mode potential of 600 VAC applied for one minute between the isolated input circuits and earth (ground), or between a given channel and any other channel.<br>**⚠⚠DANGER**<br>**HAZARD OF ELECTRIC SHOCK, EXPLOSION, OR ARC FLASH**<br>Although the module can withstand a maximum of 600 VAC applied for one minute between any channel, DO NOT apply voltages beyond the published input ranges. The channels are NOT intended for permanent connection to hazardous voltage circuits. Understand that connection of these channels to voltages greater than 30 VAC or 60 VDC violates electrical safety code requirements and may expose users to electric shock.<br>**Failure to follow these instructions will result in death or serious injury.** |
| Fieldbus Communication | Communicates with its associated FCM or FCP via the redundant 2 Mbps module Fieldbus |
| Power Requirements | • Input Voltage Range (Redundant):<br>24 VDC + 5% - 10%<br>• Consumption:<br>8.7 W (maximum)<br>• Heat Dissipation:<br>5.6 W (maximum) |
| Regulatory Compliance: Electromagnetic Compatibility (EMC) | • *European EMC Directive 2004/108/EC (Prior to April 20, 2016) and 2014/30/EU (Beginning April 20, 2016)*:<br>Meets: EN61326-1:2013 Class A Emissions and Industrial Immunity Levels |
| Regulatory Compliance: Safety Certification (FBM and Cable Balun) | • *Underwriters Laboratories (UL) for U.S. and Canada*:<br>UL/UL-C listed as suitable for use in Class I, Groups A-D; Division 2; temperature code T4 enclosure based systems. Where power is supplied by the FBM, communications circuits also meet the requirements for Class 2 as defined in Article 725 of the National Electrical Code (NFPA No.70) and Section 16 of the Canadian Electrical Code (CSA C22.1). Conditions for use are as specified in the *Standard and Compact 200 Series Subsystem User's Guide* (B0400FA).<br>• *European Low Voltage Directive 2014/35/EU and Explosive Atmospheres (ATEX) directive 2014/34/EU*:<br>ATEX (DEMKO) Ex nA IIC T4 Gc certified when connected as described in the *Standard and Compact 200 Series Subsystem User's Guide* (B0400FA) for use in an enclosure suited for an ATEX Zone 2 classified area. For more information, see Functional Specifications - Termination Assemblies, page 14. |

| | |
|---|---|
| Regulatory Compliance: Product Safety | • *Underwriters Laboratories (UL) for U.S. and Canada*:<br>UL/UL-C listed as suitable for use in UL/UL-C listed Class I, Groups A-D; Division 2; temperature code T4 enclosure based systems when connected to specified Foxboro DCS processor modules. Communications circuits also meet the requirements for Class 2 as defined in Article 725 of the National Electrical Code (NFPA No.70) and Section 16 of the Canadian Electrical Code (CSA C22.1). For more information, see *Standard and Compact 200 Series Subsystem User's Guide* (B0400FA).<br>• *European Low Voltage Directive 2006/95/EC (Prior to April 20, 2016) and 2014/35/EU (Beginning April 20, 2016) and Explosive Atmospheres (ATEX) directive 94/9/EC (Prior to April 20, 2016) and 2014/34/EU (Beginning April 20, 2016)*:<br>DEMKO certified as Ex nA IIC T4 for use in certified Zone 2 enclosure when connected to specified processor modules as described in the *Standard and Compact 200 Series Subsystem User's Guide* (B0400FA). |
| RoHS Compliance | Complies with European RoHS Directive 2011/65/EU, including amending Directives 2015/863 and 2017/2102. |
| IECEx Certification | IECEx Certified |
| Calibration Requirements | Calibration of the module and termination assembly is not required. |
| (a) The maximum allowable distance decreases when the loop is operated through an intrinsic safety barrier. The maximum distance of the field device from the FBM is a function of compliance voltage, wire gauge, and voltage drop at the device. | |

# Environmental Specifications

| | Operating | Storage |
|---|---|---|
| **Temperature** | • Module:<br>-20 to +60°C (-4 to +140°F)<br>• Termination Assembly:<br>-20 to +70°C (-4 to +158°F) | -40 to +70°C (-40 to +158°F) |
| **Relative Humidity** | 5 to 95% (noncondensing) | 5 to 95% (noncondensing) |
| **Altitude** | -300 to +3,000 m (-1,000 to +10,000 ft) | -300 to +12,000 m (-1,000 to +40,000 ft) |
| **Contamination** | Suitable for use in Class G3 (Harsh) environments as defined in ISA Standard S71.04, based on exposure testing according to EIA Standard 364-65, Class III. | |
| **Vibration** | 0.75g from 5 to 500 Hz | |

# Physical Specifications

| | |
|---|---|
| Mounting | • Module:<br>The Compact FBM216b mounts on a Compact 200 Series 16-slot horizontal baseplate. The baseplate can be mounted on a horizontal DIN rail or on a 19 inches rack using a mounting kit. See *Compact 200 Series 16-Slot Horizontal Baseplate* (PSS 41H-2C200).<br>• Termination Assembly (TA):<br>The TA mounts on a DIN rail and accommodates multiple DIN rail styles including 32 mm (1.26 in) and 35 mm (1.38 in). |
| Mass | • Module:<br>185 g (6.5 oz) approximate<br>• Termination Assembly:<br>Compression: 181 g (0.40 lb) approximate |
| Dimensions | • Module:<br>◦ Height: 130 mm (5.12 in)<br>◦ Width: 25 mm (0.98 in)<br>◦ Depth: 150 mm (5.9 in) - including baseplate connectors, 139 mm (5.46 in)<br>• Termination Assembly:<br>◦ See Compression Termination Assembly - RH924JH, page 16 |
| Part Numbers | • Compact FBM216b Module:<br>RH101AD<br>• Termination Assembly:<br>See Functional Specifications - Termination Assemblies, page 14<br>• Redundant Adapter<br>RH101AX |
| Termination Cables | • Cable Lengths:<br>Up to 30 m (98 ft)<br>• Cable Materials:<br>Polyurethane (PVC) or Low Smoke Zero Halogen (LSZH)<br>• Termination Cable Type:<br>Type 1 – See Functional Specifications - Termination Assemblies, page 14<br>• Cable Connection - TA:<br>◦ FBM Baseplate End:<br>37-pin D-subminiature<br>◦ TA End:<br>25-pin D-subminiature |
| Field Termination Connections | • Compression-Type Accepted Wiring Sizes:<br>◦ Solid/Stranded/AWG:<br>0.2 to 4 $mm^2$ /0.2 to 2.5 $mm^2$/24 to 12 AWG<br>◦ Stranded with Ferrules:<br>0.2 to 2.5$mm^2$ with or without plastic collar |

# Termination Assemblies and Cables

Field input signals connect to the Compact 200 Series I/O subsystem via DIN rail mounted Termination Assemblies(TAs). The TA for the Compact FBM216b module is available in Polyamide (PA) material with compression screw terminations.

For more information, see Functional Specifications - Termination Assemblies, page 14 for the TA used with the Compact FBM216b.

The Compact FBM216b pair and redundant adapter combination provides sufficient loop resistance to allow use of the HART Hand-Held Terminal, or PC20 Intelligent Field Device Configurator.

A removable termination cable connects the DIN rail mounted TA to the FBM via a field connector on the baseplate in which the FBM is installed. Termination cables are available in the following materials:

- Polyurethane (PVC)
- Low Smoke Zero Halogen (LSZH)

Termination cables are available in a variety of lengths, up to 30 meters (98 feet), allowing the TA to be mounted in either the enclosure or in an adjacent enclosure. See Functional Specifications - Termination Assemblies, page 14 for a list of termination cables used with the TAs for the Compact FBM216b.

# Functional Specifications - Termination Assemblies

| FBM Type | Input Signal | TA Part Number PA[a] | Termination Type[b] | TA Cable Type[c] | TA Cert. Type[d] |
|---|---|---|---|---|---|
| Compact FBM 16b Module | 8 input channels, 4 to 20 mA analog signal, alone or with HART signal superimposed | RH924JH | C | 1 | 1, 2 |

(a) PA is Polyamide related from -20 to + 70 °C (-4 to +158 °F).

(b) C = Termination Assemblies (TA) with compression terminals; RL = TA with ring lug terminals.

(c) See Cable Types and Part Numbers, page 15 for cable part numbers and specifications.

(d) See Certifications for Termination Assemblies for TA certifications definitions.

**Table 1 - Certifications for Termination Assemblies**

| Type | Certification[a] |
|---|---|
| Type 1 | TAs are UL/UL-C listed as suitable for use in Class I; Groups A-D; Division 2 temperature code T4 hazardous locations. They are CENELEC (DENKO) certified Ex nA IIC T4 for use in Zone 2 potentially explosive atmospheres. |
| Type 2 | TAs are UL/UL-C listed as associated apparatus for supplying non-incendive field circuits Class I; Groups A-D; Division 2 hazardous locations when connected to specified DIN rail mounted FBMs and field circuits meeting entity parameter constraints specified in *Standard and Compact 200 Series Subsystem User's Guide* (B0400FA). They are also CENELEC (DEMKO) certified as associated apparatus for supplying field circuits for Group IIC, Zone 2 potentially explosive atmospheres. Field circuits are also Class 2 limited energy (60 VDC, 30 VAC, 100 VA or less) if customer-supplied equipment meets Class 2 limits. |

(a) All TAs are UL/UL-C listed to comply with applicable ordinary location safety standards for fire and shock hazards. Hazardous location types comply with ATEX directive for II 3 G use. They also comply with the requirements of the European Low Voltage Directive. All listings/certifications require installation and use within the constraints specified in *Standard and Compact 200 Series Subsystem User's Guide* and the conditions stated in UL and DEMKO reports.

**Table 2 - Cable Types and Part Numbers**

| Cable Length m (ft) | Type 1 P/PVC[a] | Type 1 LSZH[b] |
|---|---|---|
| 0.5 (1.6) | RH100BY | RH100BC |
| 1.0 (3.2) | RH100BZ | RH100BD |
| 1.5 (4.9) | RH100EP | RH100EL |
| 2.0 (6.6) | RH100CA | RH100BE |
| 3.0 (9.8) | RH100CB | RH100BF |
| 5.0 (16.4) | RH100CC | RH100BG |
| 10.0 (32.8) | RH100CD | RH100BH |
| 15.0 (49.2) | RH100CE | RH100BJ |
| 20.0 (65.6) | RH100CF | RH100BK |
| 25.0 (82.0) | RH100CG | RH100BL |
| 30.0 (98.4) | RH100CH | RH100BM |

(a) P/PVC is polyurethane outer jacket and semi-rigid PVC primary conductor insulation. Temperature range: -20 to +80°C (-4 to +176°F).

(b) Low smoke zero halogen or low smoke free of halogen (LSZH) is a material classification used for cable jacketing. LSZH is composed of thermoplastic or thermoset compounds that emit limited smoke and no halogen when exposed to high sources of heat. Temperature range: -40 to +105°C (-40 to +221°F).

# Dimensions - Nominal

**Figure 3 - Compression Termination Assembly - RH924JH**

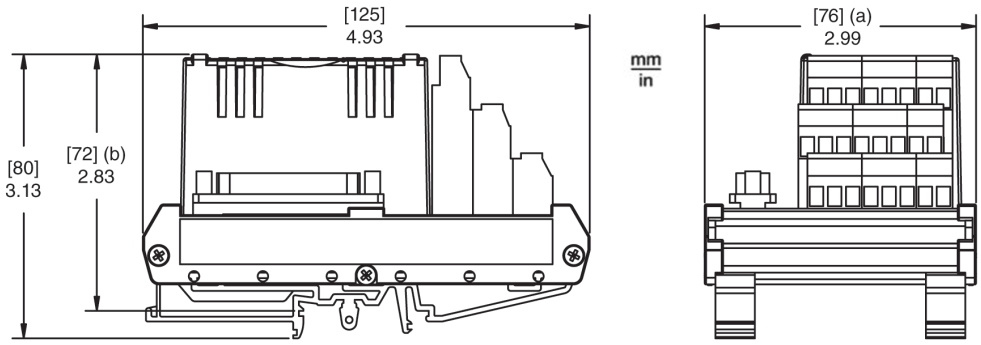


(a) Overall width - for determining DIN rail loading.

(b) Height above DIN rail (add to DIN rail height for total).

# Related Documents

| Document Number | Description |
|---|---|
| PSS 41H-2COV | *Compact 200 Series I/O Subsystem Overview* |
| PSS 41S-10FDMHRT | *Field Device Expert for HART Devices Control and I/O* |
| B0400FA | *Standard and Compact 200 Series Subsystem User's Guide* |
| PSS 41H-2C200 | *Compact 200 Series 16-Slot Horizontal Baseplate* |
| PSS 2A-1Z3E | *Model PC20 Intelligent Field Device Configurator for use with Transmitter with FoxCom or HART Communication Protocol* |
| PSS 41H-2CERTS | *Standard and Compact 200 Series I/O, Agency Certifications* |
| PSS 41H-2C480 | *Compact Power Supply – FPS480-24* |
| PSS 41S-3FCPICS | *Field Control Processor 280 (FCP280) Integrated Control Software* |

# Proposition 65

**WARNING:** This product can expose you to chemicals including lead and lead compounds, which are known to the State of California to cause cancer and birth defects or other reproductive harm. For more information go to www.P65Warnings.ca.gov.

Schneider Electric Systems USA, Inc.
70 Mechanic Street
Foxboro, Massachusetts 02035–2040
United States of America

Global Customer Support: https://pasupport.se.com

As standards, specifications, and design change from time to time, please ask for confirmation of the information given in this publication.

© 2015–2025 Schneider Electric. All rights reserved.

PSS 41H-2C216, Rev B