Foxboro™ DCS

Compact FBM215 HART® Communication Output Interface Module

PSS 41H-2C215

Product Specification

May 2025



https://www.se.com

Legal Information

The information provided in this document contains general descriptions, technical characteristics and/or recommendations related to products/solutions.

This document is not intended as a substitute for a detailed study or operational and site-specific development or schematic plan. It is not to be used for determining suitability or reliability of the products/solutions for specific user applications. It is the duty of any such user to perform or have any professional expert of its choice (integrator, specifier or the like) perform the appropriate and comprehensive risk analysis, evaluation and testing of the products/solutions with respect to the relevant specific application or use thereof.

The Schneider Electric brand and any trademarks of Schneider Electric SE and its subsidiaries referred to in this document are the property of Schneider Electric SE or its subsidiaries. All other brands may be trademarks of their respective owner.

This document and its content are protected under applicable copyright laws and provided for informative use only. No part of this document may be reproduced or transmitted in any form or by any means (electronic, mechanical, photocopying, recording, or otherwise), for any purpose, without the prior written permission of Schneider Electric.

Schneider Electric does not grant any right or license for commercial use of the document or its content, except for a non-exclusive and personal license to consult it on an "as is" basis.

Schneider Electric reserves the right to make changes or updates with respect to or in the content of this document or the format thereof, at any time without notice.

To the extent permitted by applicable law, no responsibility or liability is assumed by Schneider Electric and its subsidiaries for any errors or omissions in the informational content of this document, as well as any non-intended use or misuse of the content thereof.

Overview

The Compact HART Communication Output Interface Module (FBM215) contains eight channel-isolated output channels. The Compact FBM215 supports any mix of standard 4 to 20 mA devices and HART devices (the signals are electrically compatible).

The Compact FBM215 can serve as a HART communications field device host, enabling Foxboro™ DCS to request and receive two digital messages per second from the field device. The message pass-through capability can be used to support HART universal, common practice, and device-specific commands, but it cannot support the burst communication mode. These commands are implemented using the Foxboro DCS Field Device Expert for HART. For details, see *Field Device Expert for HART Devices Control and I/O* (PSS 41S-10FDMHRT).

The Compact FBM215 provides an isolated power supply for each channel.

Features

- 8 channel-isolated output channels, each providing one of the following outputs:
  - Standard 4 to 20 mA analog output signal
  - Digital HART Frequency Shift Keying (FSK) signal superimposed on a 4 to 20 mA analog output signal
- FSK modem dedicated to each output channel for bi-directional digital communications with a HART field device
- Galvanic isolation of all output channels from each other, and from ground and module logic
- Support for HART universal commands necessary to interface the field device with the Foxboro DCS Control Core Services system database
- Compact, rugged design suitable for enclosure in Class G3 (harsh) environments
- Termination Assemblies (TAs) for locally or remotely connecting field wiring to the Compact FBM215

Compact Design

The Compact FBM215's design is narrower than the standard 200 Series FBMs. It has a rugged acrylonitrile butadiene styrene (ABS) exterior for physical protection of the circuits. Enclosures specially designed for mounting the FBMs provide various levels of environmental protection, up to harsh environments per ISA Standard S71.04.

Visual Indicators

Light-emitting diodes (LEDs) incorporated into the front of the module provide visual indication of the module's operational status, and communication activity of the channels.

Easy Removal/Replacement

The module mounts on a Compact 200 Series baseplate which is either DIN rail mounted or rack mounted horizontally with a kit, and includes signal connectors for redundant Fieldbus, redundant independent DC power, and termination cables. Two screws on the FBM fix the module to the Compact 200 Series baseplate.

The module can be removed/replaced without removing field device termination cabling, power, or communication cabling.

Fieldbus Communication

A Fieldbus Communications Module or a Control Processor interfaces to the redundant 2 Mbps module Fieldbus used by the FBMs. The Compact FBM203/c/d accepts communication from either path (A or B) of the redundant 2 Mbps Fieldbus. If one path is unsuccessful or is switched at the system level, the module continues communication over the active path.

Modular Baseplate Mounting

The modules mount on a DIN rail mounted modular baseplate, which accommodates up to 16 compact FBMs. The baseplate is either DIN rail mounted or rack mounted, and includes signal connectors for redundant fieldbus, redundant independent DC power, and termination cables.

Termination Assemblies

Field output signals connect to the FBM subsystem via DIN rail mounted Termination Assemblies (TAs). The TAs used with the Compact FBM215 are described in Termination Assemblies and Cables, page 10.

Functional Specifications

Field Device Channels	• Supported HART Instrument Types: HART instruments compliant to Version 5, 6, or 7 of the HART specifications may be used • Interface: 8 isolated output channels • Communications to the Device: Point-to-point, master/slave, asynchronous, half-duplex, at 1200 baud • Detected Error Checking: Parity on each byte, and one CRC check byte on each message • Speed: 2 messages per second • Fastest Allowed ECB Block Period: 100 ms; however, we recommended that you see the *Sizing Guidelines and Excel Workbook* appropriate for your Control Processor to determine the optimal loading for a 100 ms Block Processing Cycle (BPC). • Maximum Distance (FBM215 to Field Device): Meets HART FSK physical layer specification HCF_SPEC-54, Revision 8.1 [up to 3,030 m (10,000 ft)] **NOTE:** The maximum allowable distance decreases when the loop is operated through an intrinsic safety barrier. The maximum distance of the field device from the FBM is a function of compliance voltage (19 VDC at 20.4 mA), wire and load resistance, and voltage drop at the field device. • Current Outputs: ◦ Analog Accuracy (Includes Linearity): ±0.05% of span (between 4 mA and 20 mA) ◦ Output Load: 750 Ω maximum ◦ Maximum Rate of Change: 20 mA in 60 milliseconds ◦ Resolution: 13 bits • Loop Power Supply Protection: Each channel is channel-to-channel galvanically isolated, current limited, and voltage regulated. All analog outputs are limited by their design to about 25 mA. If the output FET shorts, the output current could increase up to 100 mA. In normal operation, the FBM outputs a constant current into a 0 to 750 Ω load. • Isolation: The channels are galvanically isolated (both optical and transformer isolation) from each other, and from ground and module logic. The module withstands, without damage, a potential of 600 VAC applied for one minute between the isolated channels and earth (ground).

	⚠⚠DANGER **HAZARD OF ELECTRIC SHOCK, EXPLOSION, OR ARC FLASH** Although the module can withstand a maximum of 600 VAC applied for one minute between any channel, DO NOT apply voltages beyond the published input ranges. The channels are NOT intended for permanent connection to hazardous voltage circuits. Understand that connection of these channels to voltages greater than 30 VAC or 60 VDC violates electrical safety code requirements and may expose users to electric shock. **Failure to follow these instructions will result in death or serious injury.**
Fieldbus Communication	Communicates with its associated FCM or FCP via the redundant 2 Mbps module Fieldbus
Power Requirements	• Input Voltage Range (Redundant): 24 VDC +5% -10% • Consumption: 5 W (maximum) • Heat Dissipation: 4 W (maximum)
Calibration Requirements	Calibration of the module and termination assembly is not required.
Regulatory Compliance: Electromagnetic Compatibility (EMC)	• *European EMC Directive 2004/108/EC (Prior to April 20, 2016) and 2014/30/EU (Beginning April 20, 2016)*: Meets: EN61326-1:2013 Class A Emissions and Industrial Immunity Levels
Regulatory Compliance: Product Safety	• *Underwriters Laboratories (UL) for U.S. and Canada*: UL/UL-C listed as suitable for use in UL/UL-C listed Class I, Groups A-D; Division 2; temperature code T4 enclosure based systems when connected to specified Foxboro DCS processor modules as described in the *Standard and Compact 200 Series Subsystem User's Guide* (B0400FA). Communications circuits also meet the requirements for Class 2 as defined in Article 725 of the National Electrical Code (NFPA No.70) and Section 16 of the Canadian Electrical Code (CSA C22.1). Conditions for use are as specified in the *Standard and Compact 200 Series Subsystem User's Guide* (B0400FA). • *European Low Voltage Directive 2006/95/EC (Prior to April 20, 2016) and 2014/35/EU (Beginning April 20, 2016) and Explosive Atmospheres (ATEX) directive 94/9/EC (Prior to April 20, 2016) and 2014/34/EU (Beginning April 20, 2016)*: DEMKO certified as Ex nA IIC T4 for use in certified Zone 2 enclosure when connected to specified processor modules as described in the *Standard and Compact 200 Series Subsystem User's Guide* (B0400FA). Also, see Table 1.
RoHS Compliance	Complies with European RoHS Directive 2011/65/EU, including amending Directives 2015/863 and 2017/2102.
IECEx Certification	IECEx Certified

Environmental Specifications

	Operating	Storage
Temperature	• Module: -20 to +60°C (-4 to +140°F) • Termination Assembly — PA (Polyamide): -20 to +70°C (-4 to +158°F)	-40° to +70°C (-40° to 158°F)
Relative Humidity	5 to 95% (noncondensing)	
Altitude	-300 to +3,000 m (-1,000 to +10,000 ft)	-300 to +12,000 m (-1,000 to +40,000 ft)
Contamination	Suitable for use in Class G3 (Harsh) environments as defined in ISA Standard S71.04, based on exposure testing according to EIA Standard 364-65, Class III.	
Vibration	0.75g from 5 to 500 Hz	

NOTE: The environmental limits of this module may be enhanced by the type of enclosure containing the module. See the applicable Product Specification Sheet (PSS) that describes the type of enclosure to be used.

Physical Specifications

Mounting	• Module: The Compact FBM215 mounts on a Compact 200 Series 16-slot horizontal baseplate. The baseplate can be mounted on a horizontal DIN rail, or on a 19-inch rack using a mounting kit. See *Compact 200 Series 16-Slot Horizontal Baseplate* (PSS 41H-2C200). • Termination Assembly (TA): The TA mounts on a DIN rail and accommodates multiple DIN rail styles including 32 mm (1.26 in) and 35 mm (1.38 in).
Weight	• Module: 185 g (6.5 oz) approximate • Termination Assembly: Compression: 181 g (0.40 lb) approximate Ring Lug: 249 g (0.55 lb) approximate
Dimensions	• Module: ◦ Height: 130 mm (5.12 in) ◦ Width: 25 mm (0.98 in) ◦ Depth: 150 mm (5.9 in) - Including baseplate connectors, 139 mm (5.46 in) • Termination Assembly: See Dimensions - Nominal, page 13.
Part Numbers	• Compact FBM215 Module: RH101AC • Termination Assemblies: See Functional Specifications — Termination Assemblies, page 11.
Termination Cables	• Cable Lengths: Up to 30 m (98 ft) • Cable Materials: Polyurethane or Low Smoke Zero Halogen (LSZH) • Termination Cable Type: Types 1 – See Table 2. • Cable Connection – TA: FBM Baseplate End: 37-pin D-subminiature Termination Assembly End: 25-pin D-subminiature

Construction – Termination Assembly	• Material: Compression: Polyamide (PA)
Field Termination Connections	• Compression-Type Accepted Wiring Sizes: Solid/Stranded/AWG: 0.2 to 4 mm^2 /0.2 to 2.5 mm^2 /24 to 12 AWG Stranded with Ferrules: 0.2 to 2.5 mm^2 with or without plastic collar • Ring-Lug Type Accepted Wiring Sizes: ◦ #6 size connectors (0.375 in (9.5 mm)) ◦ 0.5 to 4 mm^2 /22 AWG to 12 AWG

Termination Assemblies and Cables

Field output signals connect to the FBM subsystem via DIN rail mounted Termination Assemblies (TAs), which are electrically passive. TAs for the Compact FBM215 are available in these forms:

- Compression screw type using Polyamide (PA) material

See Functional Specifications — Termination Assemblies, page 11 for a list of TAs used with the Compact FBM215.

The Compact FBM215 provides sufficient loop resistance to allow use of the HART Hand-Held Terminal, or PC20 Intelligent Field Device Configurator. For details, see *Model PC20 Intelligent Field Device Configurator for Use with Transmitter with FoxCom or HART Communication Protocol* (PSS 2A-1Z3E).

A removable termination cable connects the DIN rail mounted TA to the FBM via a field connector on the baseplate in which the FBM is installed. Termination cables are available in these materials:

- Polyurethane
- Low Smoke Zero Halogen (LSZH)

Termination cables are available in a variety of lengths, up to 30 meters (98 feet), allowing the TA to be mounted in either the enclosure or in an adjacent enclosure. See Table 2, page 12 for a list of termination cables used with the TAs for the Compact FBM215.

Functional Specifications — Termination Assemblies

FBM Type	Output Signal	TA Part Number	Termination Type[b]	TA Cable Type[c]	TA Cert. Type[d]
		PA[a]			
Compact FBM215 Module	8 output channels, 4 to 20 mA analog signal, alone or with HART signal superimposed	RH926SP	C	1	1, 2

(a) PA is polyamide rated from -20 to +70°C (-4 to +158°F).

(b) C = Termination Assembly (TA) with compression terminals; RL = TA with ring lug terminals.

(c) See Cable Types and Part Numbers for cable part numbers and specifications.

(d) See Certification for Termination Assemblies for TA certification definitions.

Table 1 - Certification for Termination Assemblies

Type	Certification [a]
Type 1	TAs are UL/UL-C listed as suitable for use in Class I; Groups A-D; Division 2 temperature code T4 hazardous locations. They are CENELEC (DEMKO) certified Ex nA IIC T4 for use in Zone 2 potentially explosive atmospheres.
Type 2	TAs are UL/UL-C listed as associated apparatus for supplying non-incendive field circuits Class I; Groups A-D; Division 2 hazardous locations when connected to specified DIN rail mounted FBMs and field circuits meeting entity parameter constraints specified in *Standard and Compact 200 Series Subsystem User's Guide* (B0400FA). They are also CENELEC (DEMKO) certified as associated apparatus for supplying field circuits for Group IIC, Zone 2 potentially explosive atmospheres. Field circuits are also Class 2 limited energy (60 VDC, 30 VAC, 100 VA or less) if customer-supplied equipment meets Class 2 limits.

(a) All TAs are UL/UL-C listed to comply with applicable ordinary location safety standards for fire and shock hazards. Hazardous location types comply with ATEX directive for II 3 G use. They also comply with the requirements of the European Low Voltage Directive. All listings/certifications require installation and use within the constraints specified in *Standard and Compact 200 Series Subsystem User's Guide* (B0400FA) and the conditions stated in UL and DEMKO reports.

Table 2 - Cable Types and Part Numbers

Cable Length m (ft)	Type 1 P/PVC (a)	Type 1 LSZH(b)
0.5 (1.6)	RH100BY	RH100BC
1.0 (3.2)	RH100BZ	RH100BD
1.5 (4.9)	RH100EP	RH100EL
2.0 (6.6)	RH100CA	RH100BE
3.0 (9.8)	RH100CB	RH100BF
5.0 (16.4)	RH100CC	RH100BG
10.0 (32.8)	RH100CD	RH100BH
15.0 (49.2)	RH100CE	RH100BJ
20.0 (65.6)	RH100CF	RH100BK
25.0 (82.0)	RH100CG	RH100BL
30.0 (98.4)	RH100CH	RH100BM

(a) P/PVC is polyurethane outer jacket and semi-rigid PVC primary conductor insulation.

(b) Low smoke zero halogen or low smoke free of halogen (LSZH) is a material classification used for cable jacketing. LSZH is composed of thermoplastic or thermoset compounds that emit limited smoke and no halogen when exposed to high sources of heat. Temperature range: -40 to +105°C (-40 to +221°F).

Migration Use of Termination Assemblies

When a Compact FBM215 is used to replace the 100 Series FBM37, it may use any of the appropriate termination assemblies listed above for the FBM37's field I/O wiring.

Dimensions - Nominal

Figure 1 - Compression Termination Assembly

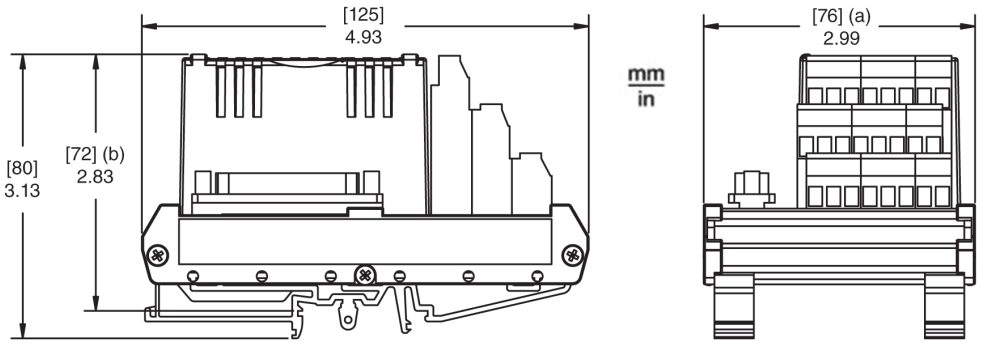

Figure 2 - Ring Lug Termination Assembly

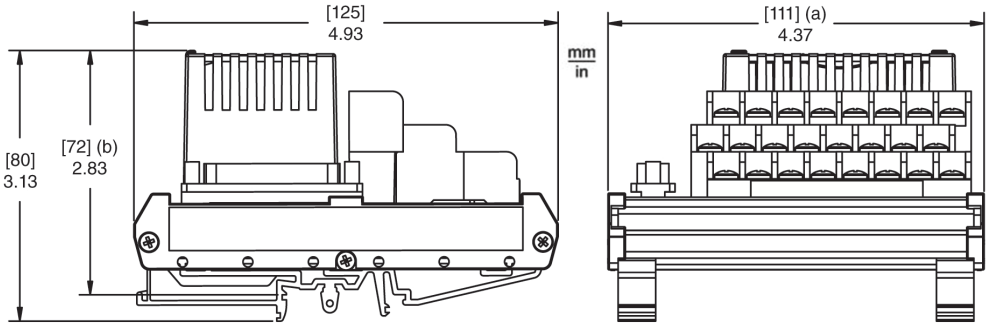

(a) Overall width — for determining DIN rail loading.

(b) Height above DIN rail (add to DIN rail height for total).

Related Documents

Document Number	Description
PSS 41H-2COV B3	*Compact 200 Series I/O Subsystem Overview*
PSS 41S-10FDMHRT	*Field Device Expert for HART Devices Control and I/O*
B0400FA	*Standard and Compact 200 Series Subsystem User's Guide*
PSS 41H-2C200	*Compact 200 Series 16-Slot Horizontal Baseplate*
PSS 2A-1Z3E	*Model PC20 Intelligent Field Device Configurator for Use with Transmitter with FoxCom or HART Communication Protocol*
PSS 41H-2W12	*DIN Rail Mounted Compact 200 Series I/O Equipment, Agency Certifications*
PSS 41H-2C480	*Compact Power Supply - FPS480-24*
PSS 41S-3FCPICS	*Field Control Processor 280 (FCP280) Integrated Control Software*

Proposition 65

WARNING: This product can expose you to chemicals including lead and lead compounds, which are known to the State of California to cause cancer and birth defects or other reproductive harm. For more information go to www.P65Warnings.ca.gov.

Schneider Electric Systems USA, Inc.
70 Mechanic Street
Foxboro, Massachusetts 02035–2040
United States of America

Global Customer Support: https://pasupport.se.com

As standards, specifications, and design change from time to time, please ask for confirmation of the information given in this publication.

© 2017–2025 Schneider Electric. All rights reserved.

PSS 41H-2C215, Rev B