Foxboro™ DCS

Compact FBM211, 0 to 20 mA Input Module

PSS 41H-2C211

Product Specifications

May 2025



https://www.se.com

Legal Information

The information provided in this document contains general descriptions, technical characteristics and/or recommendations related to products/solutions.

This document is not intended as a substitute for a detailed study or operational and site-specific development or schematic plan. It is not to be used for determining suitability or reliability of the products/solutions for specific user applications. It is the duty of any such user to perform or have any professional expert of its choice (integrator, specifier or the like) perform the appropriate and comprehensive risk analysis, evaluation and testing of the products/solutions with respect to the relevant specific application or use thereof.

The Schneider Electric brand and any trademarks of Schneider Electric SE and its subsidiaries referred to in this document are the property of Schneider Electric SE or its subsidiaries. All other brands may be trademarks of their respective owner.

This document and its content are protected under applicable copyright laws and provided for informative use only. No part of this document may be reproduced or transmitted in any form or by any means (electronic, mechanical, photocopying, recording, or otherwise), for any purpose, without the prior written permission of Schneider Electric.

Schneider Electric does not grant any right or license for commercial use of the document or its content, except for a non-exclusive and personal license to consult it on an "as is" basis.

Schneider Electric reserves the right to make changes or updates with respect to or in the content of this document or the format thereof, at any time without notice.

To the extent permitted by applicable law, no responsibility or liability is assumed by Schneider Electric and its subsidiaries for any errors or omissions in the informational content of this document, as well as any non-intended use or misuse of the content thereof.

Overview

The Compact FBM211, 0 to 20 mA Input Interface Module contains sixteen 20 mA DC analog input channels, each channel accepting a 2-wire analog sensor input, such as a 4 to 20 mA transmitter, a line-monitored digital input signal with end of line resistors, or a self-powered 20 mA source. The input channels are galvanically isolated from ground and module logic. The module performs the signal conversion required to interface the electrical input signals from the field sensors to the FCP.

It is part of the Compact 200 Series I/O subsystem described in *Compact 200 Series I/O Subsystem Overview* (PSS 41H-2COV).

The Compact FBM211 executes an analog input application program, which provides configurable options for Conversion Time and Rate of Change Limits.

Features

- Sixteen 20 mA DC analog input channels
- Each group of eight input channels is group isolated
- Compact, rugged design suitable for enclosure in Class G3 (harsh) environments
- Execution of an analog input application program that provides conversion time and configurable options for Rate of Change Limits
- High accuracy achieved by sigma-delta data conversions for each channel
- Termination Assemblies (TAs) for locally or remotely connecting field wiring to the Compact FBM211
- TAs for external or fieldbus module (FBM) powered transmitters

High Accuracy

For high accuracy, the module incorporates a multiplexed Sigma-Delta converter shared by all channels, which can provide new analog input readings every 100 ms, and a configurable integration period to remove any process noise and power line frequencies. Each time period, the FBM converts each analog input to a digital value, averages these values over the time period and provides the averaged value to the controller.

Compact Design

The Compact FBM211's design is narrower than the standard 200 Series FBMs. It has a rugged Acrylonitrile Butadiene Styrene (ABS) exterior for physical protection of the circuits. Enclosures specially designed for mounting the FBMs provide various levels of environmental protection, up to harsh environments, per ISA Standard S71.04.

Visual Indicators

Red and green light-emitting diodes (LEDs) incorporated into the front of the module provide visual status indications of FBM functions.

Easy Removal/Replacement

The module mounts on a Compact 200 Series baseplate. Two screws on the FBM attach the module to the baseplate. The module can be removed/replaced without removing field device termination cabling, or power or communication cabling.

Fieldbus Communication

A Fieldbus Communications Module or a Control Processor interfaces to the redundant 2 Mbps module Fieldbus used by the FBMs. The Compact FBM211 accepts communication from either path (A or B) of the 2 Mbps Fieldbus. If one path is unsuccessful or is switched at the system level, the module continues communication over the active path.

Modular Baseplate Mounting

The modules mount on a DIN rail mounted modular baseplate, which accommodates up to 16 compact FBMs. The baseplate is either DIN rail mounted or rack mounted, and includes signal connectors for redundant fieldbus, redundant independent DC power, and termination cables.

Termination Assemblies

Field I/O signals connect to the FBM subsystem via DIN rail mounted TAs. The TAs used with the Compact FBM211 are described in Termination Assemblies and Cables, page 10.

Functional Specifications

Input	16 group isolated and independent channels
Input Range (each channel)	0 to 20.4 mA DC (each channel current limited to 33 mA)
Accuracy (includes linearity)	±0.03% of span Accuracy temperature coefficient: ±50 ppm/ C
Input Signal A/D Conversion	Each channel performs A/D signal conversion using a multiplexed Sigma-Delta converter.
Integration Period	Software configurable
Common Mode Rejection	>100 dB at 50 or 60 Hz
Normal Mode Rejection	>35 dB at 50 or 60 Hz
Input Channel Impedance	61.9 Ω nominal
Maximum Loop Resistance	750 Ω
Field Device Cabling Distance	Maximum distance of the field device from the FBM is a function of compliance voltage (23 V for internal power), wire gauge, and voltage drop at the field device.
Loop Power Supply Protection	Each channel is current limited and voltage regulated when used with TA RH916BT or P0916BU that limits short circuit current to 35 mA. If the current limit circuit shorts out, the current is limited to about 385 mA.
HART® Protocol Compatibility	The channels meet the impedance requirements for a HART High Impedance Device and can be used in a HART loop without interfering with the HART signals between the field device and a Hand-Held Communicator (HHC). If a FoxCom or HART transmitter is used with Compact FBM211, a 200 ohm in-line resistor (assembly part number RH902VY) must be added in series with the transmitter.
Input Channel Isolation	The channels are not galvanically isolated from each other, but are galvanically isolated from ground and module logic. Group isolated inputs use the FBM subsystem power supply for field power. The module withstands, without damage, a potential of 600 VAC applied for one minute between the group isolated channels and earth (ground). **⚠⚠DANGER** **HAZARD OF ELECTRIC SHOCK, EXPLOSION, OR ARC FLASH** Although the module can withstand a maximum of 600 VAC applied for one minute between any channel, DO NOT apply voltages beyond the published input ranges. The channels are NOT intended for permanent connection to hazardous voltage circuits. Understand that connection of these channels to voltages greater than 30 VAC or 60 VDC violates electrical safety code requirements and may expose users to electric shock. **Failure to follow these instructions will result in death or serious injury.**
Communication	Communicates with its associated FCM or FCP via the redundant 2 Mbps module Fieldbus

Power Requirements	• Input voltage range (redundant) 24 VDC +5%, -10% • Consumption: 3.5 W (External Power) 11 W (Internal Power) • Heat Dissipation: 3.0 W
Calibration Requirements	Calibration of the module and termination assembly is not required.
Regulatory Compliance: Electromagnetic Compatibility (EMC)	• *European EMC Directive 2004/108/EC (Prior to April 20, 2016) and 2014/30/EU (Beginning April 20, 2016)*: Meets: EN61326-1:2013 Class A Emissions and Industrial Immunity Levels
Regulatory Compliance: Product Safety	• *Underwriters Laboratories (UL) for U.S. and Canada*: UL/UL-C listed as suitable for use in UL/UL-C listed Class I, Groups A-D; Division 2; temperature code T4 enclosure based systems when connected to specified Foxboro DCS processor modules. Communications circuits also meet the requirements for Class 2 as defined in Article 725 of the National Electrical Code (NFPA No.70) and Section 16 of the Canadian Electrical Code (CSA C22.1). For more information, see *Standard and Compact 200 Series Subsystem User's Guide* (B0400FA). • *European Low Voltage Directive 2006/95/EC (Prior to April 20, 2016) and 2014/35/EU (Beginning April 20, 2016) and Explosive Atmospheres (ATEX) directive 94/9/EC (Prior to April 20, 2016) and 2014/34/EU (Beginning April 20, 2016)*: DEMKO certified as Ex nA IIC T4 for use in certified Zone 2 enclosure when connected to specified I/A Series processor modules as described in the *Standard and Compact 200 Series Subsystem User's Guide* (B0400FA).
RoHS Compliance	Complies with European RoHS Directive 2011/65/EU, including amending Directives 2015/863 and 2017/2102.
IECEx Certification	IECEx Certified

Environmental Specifications

	Operating	Storage
Temperature	• Compact FBM211: -20 to +60°C (-4 to +140°F) • Termination Assembly - PVC[(a)]: -20 to +50°C (-4 to +122°F) • Termination Assembly - PA: -20 to +70°C (-4 to +158°F)	-40 to +70°C (-40 to +158°F)
Relative Humidity	5 to 95% (noncondensing)0	5 to 95% (noncondensing)
Altitude	-300 to +3,000 m (-1,000 to +10,000 ft)	-300 to +12,000 m (-1,000 to +40,000 ft)
Contamination	Suitable for use in Class G3 (Harsh) environments as defined in ISA Standard S71.04, based on exposure testing according to EIA Standard 364-65, Class III.	
Vibration	0.75g (5 to 500 Hz)	
(a) Do not use this termination assembly when the temperature specification exceeds +50°C (122°F).		

NOTE: The environmental limits of this module may be enhanced by the type of enclosure containing the module. See the applicable Product Specification Sheet (PSS) that describes the type of enclosure to be used.

Physical Specifications

Mounting	• Module: The Compact FBM211 mounts on a Compact 200 Series 16-slot horizontal baseplate. The baseplate can be mounted on a horizontal DIN rail, or horizontally on a 19-inch rack using a mounting kit. See *Compact 200 Series 16-Slot Horizontal Baseplate* (PSS 41H-2C200) for details. • Termination Assembly: The TA mounts on a DIN rail and accommodates multiple DIN rail styles including 32 mm (1.26 in) and 35 mm (1.38 in).
Weight	• Module: 185 g (6.5 oz) approximate • Termination Assemblies: ◦ Compression: 272 g (0.60 lb, approximate) ◦ Ring Lug: 363 g (0.80 lb, approximate)
Dimensions	• Compact FBM211: ◦ Height: 130 mm (5.12 in) ◦ Width: 25 mm (0.98 in) ◦ Depth: 150 mm (5.9 in) - Including baseplate connectors, 139 mm (5.46 in) • Termination Assembly: ◦ See Dimensions - Nominal, page 13.
Part Numbers	• Compact FBM211: RH101DE • Termination Assemblies: See Functional Specifications.-.Termination Assemblies, page 11

Termination Cables	• Cable Lengths: Up to 30 m (98 ft) • Cable Materials Polyurethane outer jacket over semi-rigid PVC primary conductor insulation (P/PVC) Low Smoke Zero Halogen (LSZH) • Termination Cable Type: Type 4 — See Table 2, page 12 • Cable Connection: ◦ FBM Baseplate End: 37-pin D-subminiature ◦ Termination Assembly End: 37-pin D-subminiature
Construction - Termination Assembly	• Material: Compression PVC Ring Lug PVC • Terminal Blocks: Inputs - 2 tiers, 16 positions
Field Termination Connections	• Compression - Accepted Wiring Sizes: ◦ Solid/Stranded/AWG: 0.2 to 4 mm^2/0.2 to 2.5 mm^2/24 to 12 AWG ◦ Stranded with Ferrules: 0.2 to 2.5 mm^2 with or without plastic collar • Ring-Lug - Accepted Wiring Sizes #6 size connectors (0.375 in (9.5 mm)) 0.5 to 4 mm^2/22 AWG to 12 AWG

Termination Assemblies and Cables

Field I/O signals connect to the FBM subsystem via DIN rail mounted termination assemblies, which are electrically passive. TAs for the Compact FBM211 module are available in these forms:

- Compression screw type using Polyvinyl Chloride (PVC) material
- Ring lug type using PVC material

Each Compact FBM211 Termination Assembly and its associated termination cable provide feedthrough connection between sixteen 2-wire analog input signals and the Compact FBM211.

Loop power is provided to the field devices by a customer-supplied external DC power supply or by the FBM auxiliary +24 VDC power supply depending on the TA selected.

A removable termination cable connects the DIN rail mounted TA to the FBM via a field connector on the baseplate in which the FBM is installed. Termination cables are available in these materials:

- Polyurethane
- Low Smoke Zero Halogen (LSZH)

Termination cables are available in a variety of lengths, up to 30 meters (98 feet), allowing the termination assemblies to be mounted as needed by plant design. See Table 2, page 12 for a list of termination cables used with the TAs for the Compact FBM211.

Functional Specifications.-.Termination Assemblies

FBM Type	Input Signal	TA Part Number[a]		Termination Type[b]	TA Cable Type[c]	TA Cert. Type[d]
		PVC	PA			
Compact FBM211	Loop power is provided to the field devices by a customer-supplied external DC power supply.	RH916JT P0916PQ[e]		C RL	4	1,2
Compact FBM211	Loop power is provided to the field devices by the FBM auxiliary +24 VDC power supply.	P0916BU[e]	RH916BT	C RL	4	1,4

(a) PVC is polyvinyl chloride rated from -20 to +50°C (-4 to +122°F); PA is polyamide rated from -20 to +70°C (-4 to +158°F).

(b) C = TA with compression terminals; RL = TA with ring lug terminals.

(c) See Cables Types and Part Numbers, page 12 for cable part numbers.

(d) See Certification for Termination Assemblies for termination assembly certification definitions.

(e) This is not a RoHS part.

Table 1 - Certification for Termination Assemblies

Type	Certification
Type 1	TAs are UL/UL-C listed as suitable for use in Class I; Groups A-D; Division 2 temperature code T4 hazardous locations. They are CENELEC (DEMKO) certified Ex nA IIC T4 for use in Zone 2 potentially explosive atmospheres.
Type 2	TAs are UL/UL-C listed as associated apparatus for supplying non-incendive field circuits Class I; Groups A-D; Division 2 hazardous locations when connected to specified 200 Series FBMs and field circuits meeting entity parameter constraints specified in *Standard and Compact 200 Series Subsystem User's Guide* (B0400FA). They are also CENELEC (DEMKO) certified as associated apparatus for supplying field circuits for Group IIC, Zone 2 potentially explosive atmospheres. Field circuits are also Class 2 limited energy (60 VDC, 30 VAC, 100 VA or less) if customer-supplied equipment meets Class 2.
Type 4	All field circuits are Class 2 limited energy (60 VDC, 30 VAC, 100 VA or less) if customer-supplied equipment meets Class 2 limits.

Table 2 - Cables Types and Part Numbers

Cable Length m (ft)	Type 4 P/PVC [a]	Type 4 LSZH [b]
0.5 (1.6)	RH100CJ	RH100BN
1.0 (3.2)	RH100CK	RH100BP
1.5 (4.9)	RH100EQ	RH100EN
2.0 (6.6)	RH100CL	RH100BQ
3.0 (9.8)	RH100CM	RH100BR
5.0 (16.4)	RH100CN	RH100BS
10.0 (32.8)	RH100CP	RH100BT
15.0 (49.2)	RH100CQ	RH100BU
20.0 (65.6)	RH100CR	RH100BV
25.0 (82.0)	RH100CS	RH100BW
30.0 (98.4)	RH100CT	RH100BX

(a) P/PVC is polyurethane outer jacket and semi-rigid PVC primary conductor insulation. PVC is rated from -20 to +50°C (-4 to 122°F).

(b) Low smoke zero halogen or low smoke free of halogen (LSZH) is a material classification used for cable jacketing. LSZH is composed of thermoplastic or thermoset compounds that emit limited smoke and no halogen when exposed to high sources of heat. Temperature range: -40 to +105°C (-40 to +221°F).

Dimensions - Nominal

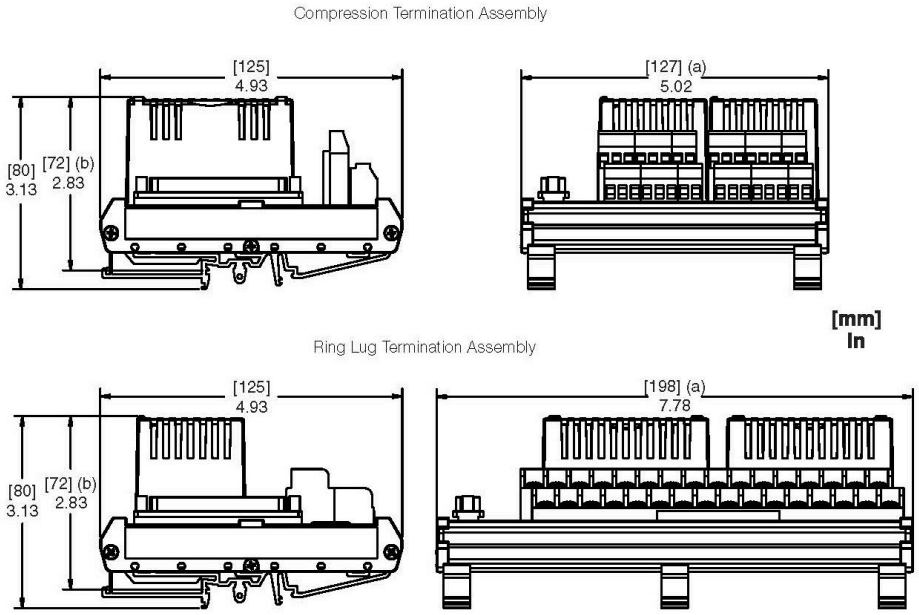

(a) Overall width — for determining DIN rail loading.

(b) Height above DIN rail (add to DIN rail height for total).

Supervised Digital Inputs

FBM211 can monitor the state of a field switch being a potential-free, "dry" contact including simultaneous line monitoring of the field loop wiring. The state of the dry contact and line continuity are reported through an AIN Block connected to the FBM211 input channel. The AIN block indicates different input currents to differentiate between a broken cable, a short between the two field loop wires, and valid open and close states of the connected switch. The line monitoring requires installing external resistors to enable monitoring of the loop current for several levels.

The external resistors may be installed in any convenient way, but they should be at least 1 watt, 1%, wired resistors. Safety ratings might be required depending on the installations. The wire lines monitored are between resistors RA and RB and between the TA and RC. Mount RA close to the TA. Mount RB and RC immediately next to the field switch.

Figure 1 - FBM211 Supervised Digital Input Connections

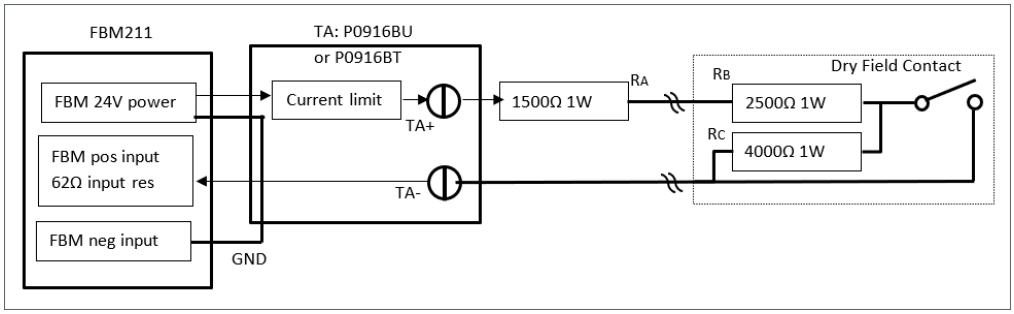

The setup shown here is also compatible with TAs RH916JT and RH916BT.

Table 3 - Loop Current Range

Dry Contact State / Wiring Fault	Loop Current
Contact open = V24/(RA+RB+RC)	3 mA
Contact closed = V24/(RA+RB)	6 mA
Field wiring open	0.00 mA
Field wiring shorted to GND = V24/RA	16mA
Field wiring shorted together = V24/RA	16mA

For more details on how to install and configure supervised digital inputs, see *Standard and Compact 200 Series Subsystem* (B0400FA).

Related Documents

Document Number	Description
PSS 41H-2COV	*Compact 200 Series I/O Subsystem Overview*
B0400FA	*Standard and Compact 200 Series Subsystem User's Guide*
PSS 41H-2C200	*Compact 200 Series 16-Slot Horizontal Baseplate*
PSS 41H-2CERTS	*Standard and Compact 200 Series I/O, Agency Certifications*
PSS 41H-2C480	*Compact Power Supply - FPS480-24*
PSS 41S-3FCPICS	*Field Control Processor 280 (FCP280) Integrated Control Software*
B0400FA	*Standard and Compact 200 Series Subsystem*

Proposition 65

WARNING: This product can expose you to chemicals including lead and lead compounds, which are known to the State of California to cause cancer and birth defects or other reproductive harm. For more information go to www.P65Warnings.ca.gov.

Schneider Electric Systems USA, Inc.
70 Mechanic Street
Foxboro Massachusetts 02035–2040
United States of America

Global Customer Support: https://pasupport.se.com

As standards, specifications, and design change from time to time, please ask for confirmation of the information given in this publication.

© 2015–2025 Schneider Electric. All rights reserved.

PSS 41H-2C211, Rev D