Foxboro™ DCS

Compact FBM207/b/c Voltage Monitor/Contact Sense Input Interface Modules

PSS 41H-2C207

Product Specification

May 2025







https://www.se.com

Legal Information

The information provided in this document contains general descriptions, technical characteristics and/or recommendations related to products/solutions.

This document is not intended as a substitute for a detailed study or operational and site-specific development or schematic plan. It is not to be used for determining suitability or reliability of the products/solutions for specific user applications. It is the duty of any such user to perform or have any professional expert of its choice (integrator, specifier or the like) perform the appropriate and comprehensive risk analysis, evaluation and testing of the products/solutions with respect to the relevant specific application or use thereof.

The Schneider Electric brand and any trademarks of Schneider Electric SE and its subsidiaries referred to in this document are the property of Schneider Electric SE or its subsidiaries. All other brands may be trademarks of their respective owner.

This document and its content are protected under applicable copyright laws and provided for informative use only. No part of this document may be reproduced or transmitted in any form or by any means (electronic, mechanical, photocopying, recording, or otherwise), for any purpose, without the prior written permission of Schneider Electric.

Schneider Electric does not grant any right or license for commercial use of the document or its content, except for a non-exclusive and personal license to consult it on an "as is" basis.

Schneider Electric reserves the right to make changes or updates with respect to or in the content of this document or the format thereof, at any time without notice.

To the extent permitted by applicable law, no responsibility or liability is assumed by Schneider Electric and its subsidiaries for any errors or omissions in the informational content of this document, as well as any non-intended use or misuse of the content thereof.

Overview

Discrete inputs can be sensed across all the usual voltage levels found in industrial facilities. The Compact FBM207/b/c Voltage Monitor/Contact Sense Input Interface Modules use one of the several termination assemblies (TAs) to match to the externally powered voltage level.

The Compact FBM207/b/c Voltage Monitor/Contact Sense Input Interface Module functions as a 16-channel DC voltage monitor (FBM207) or 16-channel contact sensor for 24 VDC inputs (FBM207b) or 48 VDC inputs (FBM207c). Each channel accepts a 2-wire input from a DC voltage source (FBM207) or pair of contacts or solid state switches (FBM207b/ FBM207c). Associated (TAs) support discrete input signals at voltages of 60 VDC, 120 VAC/125 VDC, or 240 VAC.

For voltages higher than 60 VDC, the TAs have additional signal conditioning hardware that provides voltage attenuation and optical isolation. It is part of the Compact 200 Series I/O subsystem. See *Compact 200 Series I/O Subsystem Overview* (PSS 41H-2COV).

The module is available in three distinct types, and each type with its associated TA supports discrete inputs, as shown below:

Compact FBM207	Provides voltage monitoring at: • 60 VDC • 120 VAC/125 VDC • 240 VAC Provides switch inputs with: • External 120 VAC/125 VDC • External 240 VAC
Compact FBM207b	24 VDC Contact Sense
Compact FBM207c	48 VDC Contact Sense

Each discrete input is galvanically isolated from other channels and ground, and group isolated when used with external excitation. The modules perform signal conversion required to interface electrical input signals from field sensors to the redundant module Fieldbus. In addition, they may execute programs for Discrete Input, Ladder Logic, Pulse Count, and Sequence of Events, with configurable options of input filter time.

The modules can be used as a single unit, or as a redundant pair. When used as a redundant pair, the modules combine to provide redundancy at the Fieldbus Module (FBM) level, with field input signals received from one common termination assembly through a redundant adapter affixed to the Compact FBMs' baseplate. The input current for redundant modules is doubled. A redundant digital input block in the Foxboro DCS control software validates each input in conjunction with information to/ from the module, and selects the input with the higher quality for processing in the control strategy.

A redundant contact input function block, CINR, is used for each pair of inputs. The CINR block handles input reads and initialization logic for the redundant channels. On each execution cycle of the CINR block, identical reads are queried from each module, fully exercising the fieldbus and the logic circuitry of each module.

Figure 1 - Compact FBM207/b/c Redundant Module Configuration

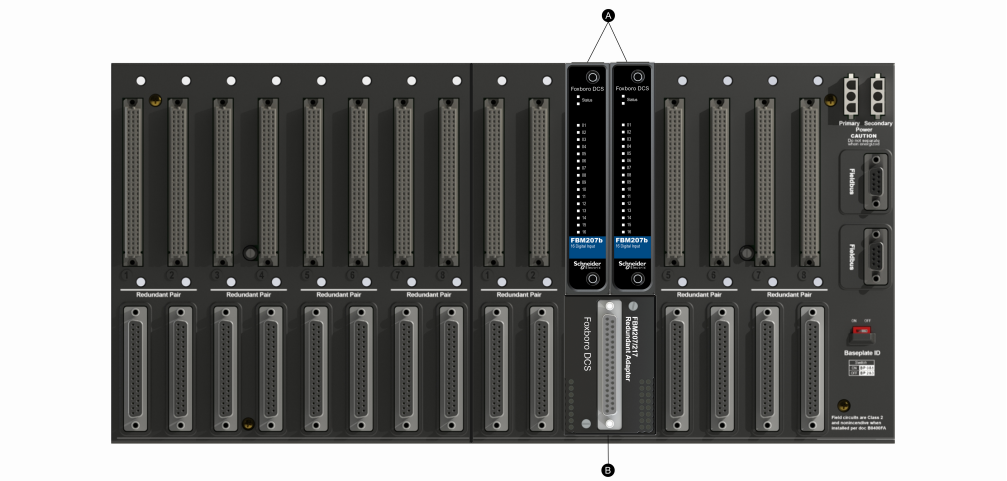

Legend	
A	Redundant Compact FBM207b FBMs Shown
B	Compact FBM207/b/c Redundant Adapter (RH101AZ)

Features

- FBM207 supports 16 discrete input signals at voltages of:
  - 15 to 60 VDC - voltage monitoring
  - 120 VAC/125 VDC - voltage monitoring or switch inputs
  - 240 VAC - voltage monitoring or switch inputs
- FBM207b/c support 16 discrete inputs:
  - FBM207b - 24 VDC contact sense
  - FBM207c - 48 VDC contact sense
- Each input is galvanically isolated, and group isolated with external excitation
- Single or redundant modules
- Compact, rugged design suitable for enclosures in Class G3 (harsh) environments
- Executes programs for Discrete Input, Ladder Logic, Pulse Count, and Sequence of Events with configurable Input Filter Time option
- Termination Assemblies (TAs) for locally or remotely connecting field wiring to the Compact FBM207/b/c
- TAs for per channel internally loop powered devices

Compact Design

The Compact FBM207/b/c's design is narrower than the Standard 200 Series FBMs, with a rugged Acrylonitrile Butadiene Styrene (ABS) exterior for physical protection of the circuits.

Enclosures specially designed for mounting the FBMs provide various levels of environmental protection, up to harsh environments (Class G3), per ISA Standard S71.04.

Visual Indicators

Light-emitting diodes (LEDs) incorporated into the front of the module provide visual indication of the module's operational status, as well as the discrete states of the individual input points.

Easy Removal/Replacement

The modules mount on a Compact 200 Series baseplate which is either DIN rail mounted or rack mounted horizontally, and includes signal connectors for redundant Fieldbus, redundant independent DC power, and termination cables. Two screws on each FBM fix the module to the Compact 200 Series baseplate.

Redundant modules must be located in adjacent positions on the baseplate, with the first module located in an odd-numbered position (for example, the positions labelled "3" and "4"). To achieve redundancy, a redundant adapter module is placed on the two adjacent baseplate termination cable connectors to provide termination for a single cable (see Compact FBM207/b/c Redundant Module Configuration, page 4). A single termination cable connects from the redundant adapter to the associated termination assembly (TA).

When redundant, either module may be replaced without upsetting field input signals to the good module. Each module can be removed/replaced without removing field termination cabling, power, or communications cabling.

Redundant Modules in Foxboro DCS HMI

The redundant pair of modules appear as two independent modules to system management software applications such as Foxboro DCS System Manager and System Manager/Display Handler (SMDH). The functional redundancy for these modules is provided by their associated control blocks.

Sequence of Events

The Sequence of Events (SOE) software package is used to acquire, store, display, and report events associated with a contact's change of state. System time is distributed to the FBM and the state change is marked with a precision of one millisecond. The contact signal may be passed through a debounce filter of variable period. System time is usually set by an optional master timekeeper receiving GPS time signals. This permits multiple control processors to be synchronized in time and therefore provide a consistent time basis for post-event analysis.

See *Sequence of Events* in Related Documents, page 18 to learn more about this package, and *Time Synchronization Equipment* for a description of the optional time synchronization capability. Also, for more information, see the section "Timestamp Accuracy and Precision of SOE Data" in the *Time Synchronization User's Guide* (B0700AQ).

Fieldbus Communication

A Fieldbus Communications Module or a Control Processor interfaces to the redundant 2 Mbps module Fieldbus used by the FBMs. The FBM accepts communication from either path (A or B) of the 2 Mbps Fieldbus. If one path is unsuccessful or is switched off at the system level, the module continues communication over the active path.

Overcurrent Protection

Field power, for contacts or solid-state switches, is current limited.

Modular Baseplate Mounting

The modules mount on a DIN rail mounted modular baseplate, which accommodates up to 16 compact FBMs. The baseplate is either DIN rail mounted or rack mounted, and includes signal connectors for redundant fieldbus, redundant independent DC power, and termination cables.

Termination Assemblies

Field I/O signals connect to the FBM subsystem via 200 Series Termination Assemblies (TAs). The TAs used with the Compact FBM207/b/c are described in Termination Assemblies and Cables, page 12.

Functional Specifications

Communication	Communicates with its associated FCM or FCP via the redundant 2 Mbps module Fieldbus.
Input	16 isolated and independent channels
Accuracy	Pulse Count No missing pulses for pulse rate 0 to 250 Hz
Filter/Debounce Time	Configurable (No Filtering, 4, 8, 16, or 32 ms)
Voltage Monitor Function - Input	• Input: Logic One, On-State Voltage: 15 to 60 VDC Logic Zero, Off-State Voltage: 0 to 5 VDC Current: 1.4 mA (typical) at 5 to 60 VDC • Source Resistance Limits: Logic One, On-State: 1 kΩ (maximum) at 15 VDC Logic Zero, Off-State: 100 kΩ (minimum) at 60 VDC
Contact Sensor Function - Input	• Range (Each Channel): Contact open (off) or closed (on) • Open-Circuit Voltage: ◦ *Compact FBM207b*: 24 VDC ±15% ◦ *Compact FBM207c*: 48 VDC ±15%
Short-Circuit Current	3.2 mA (typical)
Logic One, ON-State Resistance	1.0 kΩ (maximum)
Logic Zero, OFF-State Resistance	100 kΩ (minimum)
Isolation	Each channel is galvanically isolated from all other channels and ground. The module withstands, without damage, a potential of 600 VAC applied for one minute between any channel and ground, or between a given channel and any other channel. **⚠⚠DANGER** **HAZARD OF ELECTRIC SHOCK, EXPLOSION, OR ARC FLASH** Although the module can withstand a maximum of 600 VAC applied for one minute between any channel, DO NOT apply voltages beyond the published input ranges. The channels are NOT intended for permanent connection to hazardous voltage circuits. Understand that connection of these channels to voltages greater than 30 VAC or 60 VDC violates electrical safety code requirements and may expose users to electric shock. **Failure to follow these instructions will result in death or serious injury.**
Power Requirements	• Input Voltage Range (Redundant): 24 VDC +5%, -10% • Consumption: 5 W

	• Heat Dissipation: 5 W
Loop Power Supply Protection	Current limited at 3.2 mA (typical)
Field Terminations Functional Specifications	See Termination Assemblies and Cables, page 12.
Calibration Requirements	Calibration of the module and termination assembly is not required.
Regulatory Compliance: Electromagnetic Compatibility (EMC)	• *European EMC Directive 2004/108/EC (Prior to April 20, 2016) and 2014/30/EU (Beginning April 20, 2016)*: Meets: EN61326-1:2013 Class A Emissions and Industrial Immunity Levels
Product Safety — Low Voltage Inputs	• *Underwriters Laboratories (UL) for U.S. and Canada*: UL/UL-C listed as suitable for use in UL/ULC listed Class I, Groups A-D; Division 2; temperature code T4 enclosure based systems when connected to specified Foxboro DCS processor modules. Communications circuits also meet the requirements for Class 2 as defined in Article 725 of the National Electrical Code (NFPA No.70) and Section 16 of the Canadian Electrical Code (CSA C22.1). For more information, see *Standard and Compact 200 Series Subsystem User's Guide* (B0400FA). • *European Low Voltage Directive 2006/95/EC (Prior to April 20, 2016) and 2014/35/EU (Beginning April 20, 2016) and Explosive Atmospheres (ATEX) directive 94/9/EC (Prior to April 20, 2016) and 2014/34/EU (Beginning April 20, 2016)*: DEMKO certified as Ex nA IIC T4 for use in certified Zone 2 enclosure when connected to specified processor modules as described in the *Standard and Compact 200 Series Subsystem User's Guide* (B0400FA). For use in an enclosure suited for an ATEX Zone 2 classified area.
Product Safety — Termination Assemblies with High Voltage Inputs	• *Underwriters Laboratories (UL) for U.S. and Canada*: UL/UL-C listed as suitable for use in UL/ULC listed Class I, Groups A-D; Division 2; temperature code T4 enclosure based systems when connected to specified Foxboro DCS processor modules as described in the *Standard and Compact 200 Series Subsystem User's Guide* (B0400FA). • *European Low Voltage Directive 2006/95/EC (Prior to April 20, 2016) and 2014/35/EU (Beginning April 20, 2016) and Explosive Atmospheres (ATEX) directive 94/9/EC (Prior to April 20, 2016) and 2014/34/EU (Beginning April 20, 2016)*: DEMKO certified as Ex nA IIC T4 for use in certified Zone 2 enclosure when connected to specified processor modules as described in the *Standard and Compact 200 Series Subsystem User's Guide* (B0400FA).
RoHS Compliance	Complies with European RoHS Directive 2011/65/EU, including amending Directives 2015/863 and 2017/2102.
IECEx Certification	IECEx Certified

Environmental Specifications

	Operating	Storage
Temperature	• FBM207/b/c: -20 to +60°C (-4 to +140°F) • Termination Assembly - PA: -20 to +70°C (-4 to +158°F)	-40 to +70°C (-40 to +158°F)
Relative Humidity	5 to 95% (noncondensing)	5 to 95% (noncondensing)
Altitude	-300 to +3,000 m (-1,000 to +10,000 ft)	-300 to +12,000 m (-1,000 to +40,000 ft)
Vibration	0.75g from 5 to 500 Hz	
Contamination	Suitable for use in Class G3 (Harsh) environments as defined in ISA Standard S71.04, based on exposure testing according to EIA Standard 364-65, Class III.	

Physical Specifications

Mounting	• Module: The Compact FBM207/b/c mounts on a Compact 200 Series 16-slot horizontal baseplate. The baseplate can be mounted on a horizontal DIN rail, or horizontally on a 19-inch rack using a mounting kit. Redundant modules must be located in odd and even adjacent positions on the baseplate (positions 1 and 2, 3 and 4, 5 and 6, 7 and 8, 9 and 10 (the second 1 and 2), 11 and 12 (the second 3 and 4), 13 and 14 (the second 5 and 6), or 15 and 16 (the second 7 and 8)). See *Compact 200 Series 16-Slot Horizontal Baseplate* (PSS 41H-2C200) for more details. • Termination Assemblies: The TA mounts on a DIN rail and accommodates multiple DIN rail styles including 32 mm (1.26 in) and 35 mm 1.38 in).
Weight	• Module: 185 g (6.5 oz) approximate • Termination Assemblies: ◦ Compression Type: 127 mm (5.02 in) – 272 g (0.60 lb, approximate) 146 mm (5.75 in) – 317 g (0.7 lb, approximate ◦ Ring Lug Type: 198 mm (7.78 in) – 400 g (0.90 lb, approximate) 216 mm (8.51 in) – 440 g (1.0 lb, approximate)
Dimensions - Module	• Height: 130 mm (5.12 in) • Width: 25 mm (0.98 in) • Depth: 150 mm (5.9 in) - Including baseplate connectors, 139 mm (5.46 in)
Dimensions - Termination Assemblies	• Compression Screw: See Dimensions - Nominal, page 16. • Ring Lug: See Dimensions - Nominal, page 16.
Part Numbers	• Module: ◦ Compact FBM207: RH101GC ◦ Compact FBM207b: RH101AF ◦ Compact FBM207c RH101GD • Termination Assemblies: See Termination Assemblies and Cables, page 12. • Redundant Adapter: RH101AZ

Termination Cables	• Cable Lengths: Up to 30 m (98 ft) • Cable Materials: PVC or Low Smoke Zero Halogen (LSZH) • Termination Cable Type: Type 4 or Type 4H — See Table 2, page 15 • Cable Connection: 37-pin male D-subminiature
Construction - Termination Assembly	• Material: Polyamide (PA), compression Polyamide (PA), ring lug • Family Group Color: Dark blue - discrete • Terminal Blocks: Inputs - 2 tiers, 16 positions Excitation - 2 tiers, 4 positions
Field Termination Connections	• Compression Accepted Wiring Sizes: ◦ Solid/Stranded/AWG: 0.2 to 4 mm^2/0.2 to 2.5 mm^2/24 to 12 AWG ◦ Stranded with Ferrules: 0.2 to 2.5 mm^2 with or without plastic collar • Ring Lug Accepted Wiring Sizes: #6 size connectors (9.5 mm (0.375 in)) 0.5 to 4 mm^2/22 AWG to 12 AWG

Termination Assemblies and Cables

Field I/O signals connect to the FBM subsystem via DIN rail mounted termination assemblies (TAs). Multiple types of TAs are available with FBMs to provide pass-through I/O signal connections.

The TA can be used with a single Compact FBM207/b/c or with a redundant pair (two Compact FBM207/b/cs).

The DIN rail mounted TAs connect to the FBM subsystem baseplate by means of removable termination cables. When used with a redundant module pair, the TA is connected to the baseplate using a Compact FBM207/b/c redundant adapter (RH101AZ). The DIN rail mounted TAs connect to the redundant adapter by means of a removable termination cable.

The cables for both single and redundant configurations are available in a variety of lengths, up to 30 meters (98 feet), allowing the TAs to be mounted as needed by plant design. See Termination Cable Types and Part Numbers, page 15 for termination cable part numbers and specifications.

Discrete Inputs

Termination assemblies (TAs) with discrete inputs for the FBM207 support sixteen 2-wire discrete input signals at passive low voltage levels of less than 60 VDC and active high voltage levels of 125 VDC, 120 VAC, or 240 VAC. Active TAs support input signal conditioning for FBMs. To condition signals, these TAs may provide optical isolation, current limiting, noise reduction, voltage attenuation, or optional terminal blocks to connect externally supplied excitation voltage.

TAs with discrete contact sense inputs support sixteen 2-wire discrete input signals at passive low voltage levels of +24 VDC for the FBM207b and +48 VDC for the FBM207c.

Low Voltage Discrete Inputs

The low voltage inputs (less than 60 VDC) use passive termination assemblies (TAs). Inputs for FBM207 are voltage monitor types. Voltage monitor inputs require an external field voltage source.

Contact sense inputs use the FBM +24 VDC or +48 VDC supplied to all input channels on the assembly, to wet field contacts.

A load may not be required for proper operation of the input channels. A diode may be required for a DC inductive load only.

Functional Specifications - Termination Assemblies

FBM Type	Input Signal	TA Part No.[a] PA	Termination Type[b]	TA Cable Type[d]	TA Cert. Type[c]
Compact FBM207	16 channel, voltage monitor (external source) 15 to 60 VDC FBM207 channel isolation	RH916XN[e]	C	4	1, 2
		P0917JR [e]	RL		
Compact FBM207	16 channel, voltage monitor 120 VAC or 125 VDC Logic Zero 0 to 20 VAC; 0 to 20 VDC Logic One 80 to 132 VAC; 75 to 150 VDC Input Current for Logic One; 2 mA typical FBM207 channel isolation	RH916XP[e]	C	4	1
		P0917JS[e]	RL		
Compact FBM207	16 channel, voltage monitor 240 VAC Logic Zero 0 to 40 VAC Logic One 160 to 280 VAC Input Current for Logic One; 1.6 mA maximum FBM207 channel isolation	RH916PH	C	4	1
Compact FBM207	16 channel, voltage monitor 120 VAC or 125 VDC with external excitation Logic Zero 0 to 20 VAC; 0 to 20 VDC Logic One 80 to 132 VAC; 75 to 150 VDC Input Current for Logic One; 2 mA typical Group isolation provided by termination assembly	RH916PK	C	4	1
		P0917JT[e]	RL		
Compact FBM207	16 channel, voltage monitor 240 VAC with external excitation Logic Zero 0 to 40 VAC Logic One 160 to 280 VAC Input Current for Logic One; 1.6 mA maximum Group isolation provided by termination assembly	RH916PM	C	4	1

Compact FBM207b	16 channel, contact sense 24 VDC contact wetting from FBM207b FBM207b channel isolation	RH916XT[e]	C	4	1, 2
Compact FBM207c	16 channel, contact sense 48 VDC contact wetting from FBM207c FBM207c channel isolation	RH917MG	C	4	1, 2
		P0917MJ[e]	RL		

(a) PA (polyamide) termination assemblies (TAs) rated from -20 to +70°C (-4 to +158°F).

(b) C = TA with compression terminals, RL = TA with ring lug terminals.

(c) See Table 1 for Termination Assembly certification definitions. To help avoid false tripping of AC type inputs, route long wiring or bundled runs to minimize coupling from adjacent signals and/or noise from heavy equipment. When possible, we recommend DC excitation of input circuits for runs greater than 305 m (1000 ft).

(d) See Table 2 for cable part numbers and specifications.

(e) Polyamide RL supersedes the PVC RL, which is not a RoHS part.

Table 1 - Certification for Termination Assemblies

Type	Certification
Type 1	TAs are UL/UL-C listed as suitable for use in Class I; Groups A-D; Division 2 temperature code T4 hazardous locations. They are CENELEC (DEMKO) certified Ex nA IIC T4 for use in Zone 2 potentially explosive atmospheres.
Type 2	TAs are UL/UL-C listed for supplying field circuits Class I; Groups A-D; Division 2 hazardous locations when connected to specified 200 Series FBMs and field circuits meeting entity parameter constraints specified in *Standard and Compact 200 Series Subsystem User's Guide* (B0400FA). They are also DEMKO certified for supplying field circuits for Group IIC, Zone 2 potentially explosive atmospheres. Field circuits are also Class 2 limited energy (60 VDC, 30 VAC, 100 VA or less) if customer-supplied equipment meets Class 2.

Table 2 - Termination Cable Types and Part Numbers

Cable Length m (ft)	Type 4, 0.14 mm²/26 AWG P/PVC[(a)]	Type 1 LSZH[(b)]
0.5 (1.6)	RH100CJ	RH100BN
1.0 (3.2)	RH100CK	RH100BP
1.5 (4.9)	RH100EQ	RH100EN
2.0 (6.6)	RH100CL	RH100BQ
3.0 (9.8)	RH100CM	RH100BR
5.0 (16.4)	RH100CN	RH100BS
10.0 (32.8)	RH100CP	RH100BT
15.0 (49.2)	RH100CQ	RH100BU
20.0 (65.6)	RH100CR	RH100BV
25.0 (82.0)	RH100CS	RH100BW
30.0 (98.4)	RH100CT	RH100BX

(a) P/PVC cable assembles polyurethane outer jacket and semi-rigid PVC primary conductor insulation temperature range: -20 to +70°C (-4 to 158°F)

(b) Low smoke zero halogen or low smoke free of halogen (LSZH) is a material classification used for cable jacketing. LSZH is composed of thermoplastic or thermoset compounds that emit limited smoke and no halogen when exposed to high sources of heat. Temperature range: -40 to +105°C (-40 to +221°F)

Dimensions - Nominal

[mm]
in

Compression Termination Assemblies

RH916XN[1], RH916XT[1], RH916XP[1], RH916PH, RH917MG[1]

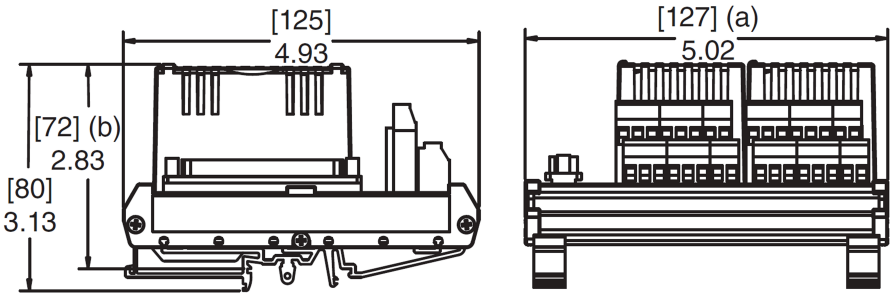

RH916PM

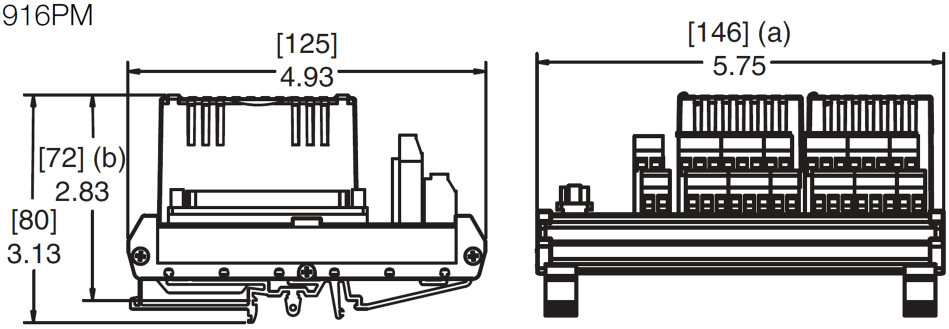

RH916PK

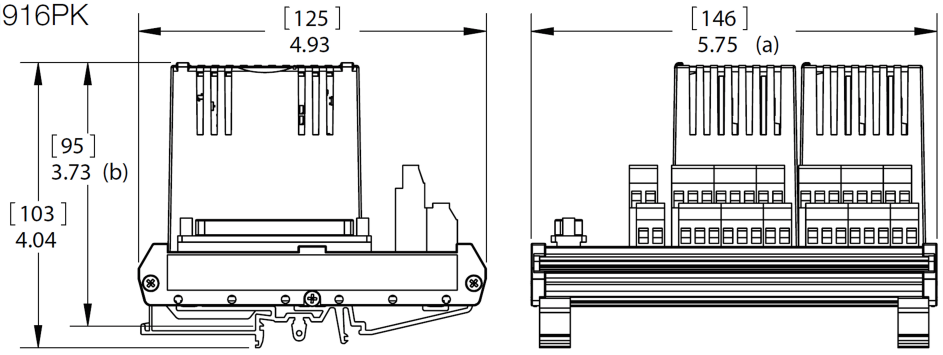

(a) Overall width – for determining DIN rail loading.
(b) Height above DIN rail (add to DIN rail height for total).

[1]Dimensions may be slightly smaller.

[mm]
in

Ring Lug Termination Assemblies

P0917JS[1], P0917JR[1], P0917MJ[1]

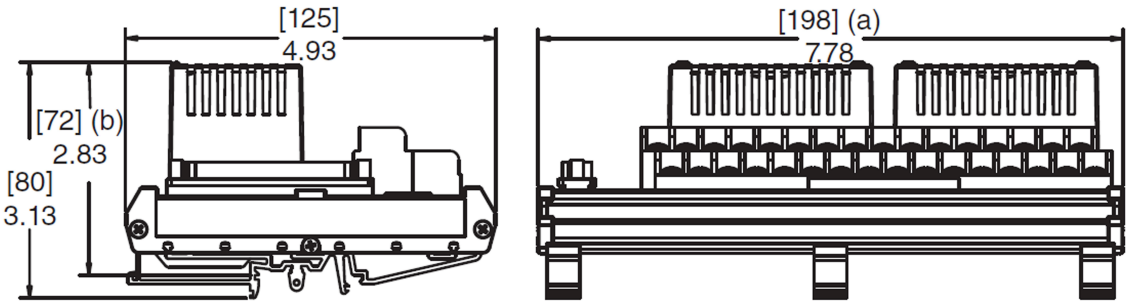

P0917JT[1]

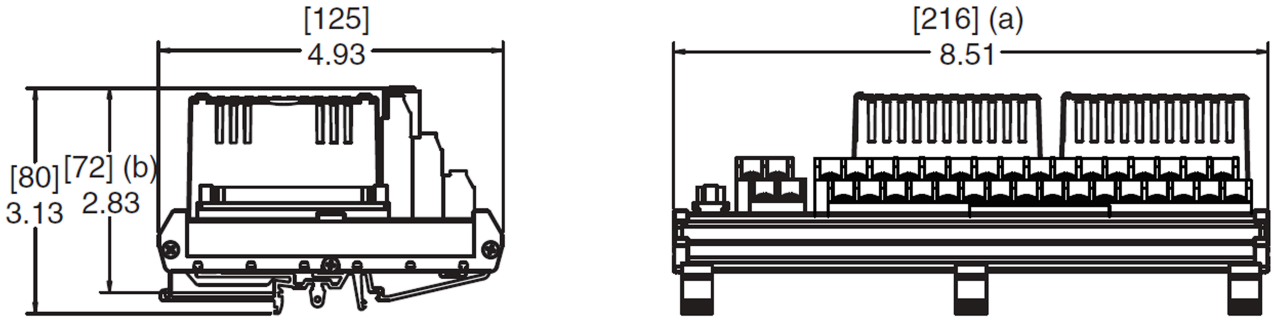

(a) Overall width – for determining DIN rail loading.
(b) Height above DIN rail (add to DIN rail height for total).

[1]Dimensions may be slightly smaller.

Related Documents

Document Number	Description
PSS 41H-2COV	*Compact 200 Series I/O Subsystem Overview*
B0400FA	*Standard and Compact 200 Series Subsystem User's Guide*
PSS 41H-2C200	*Compact 200 Series 16-Slot Horizontal Baseplate*
PSS 31S-2SOE	*Sequence of Events*
PSS 41H-4C2	*Time Synchronization Equipment*
PSS 41H-2CERTS	*Standard and Compact 200 Series I/O - Agency Certifications*
PSS 41H-2C480	*Compact Power Supply - FPS480-24*
PSS 41S-3FCPICS	*Field Control Processor 280 (FCP280) Integrated Control Software*

Proposition 65

WARNING: This product can expose you to chemicals including lead and lead compounds, which are known to the State of California to cause cancer and birth defects or other reproductive harm. For more information go to www.P65Warnings.ca.gov.

Schneider Electric Systems USA, Inc.
70 Mechanic Street
Foxboro, Massachusetts 02035–2040
United States of America

Global Customer Support: https://pasupport.se.com

As standards, specifications, and design change from time to time, please ask for confirmation of the information given in this publication.

© 2015–2025 Schneider Electric. All rights reserved.

PSS 41H-2C207, Rev B